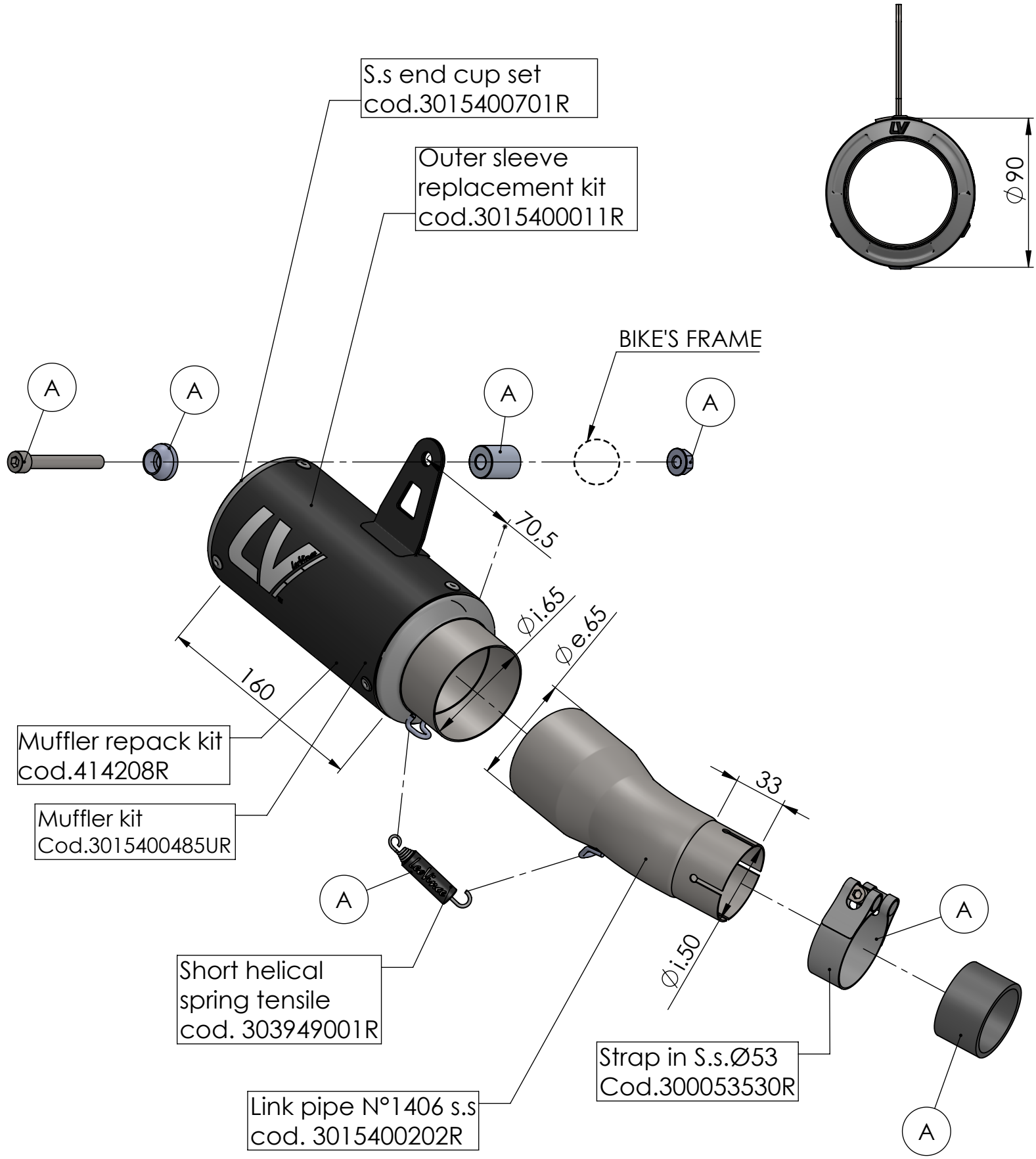

ART. 15400BU - SPARE PARTS

KAWASAKI Z 400 / NINJA 400 / Z 500 / NINJA 500

Ⓐ FITTING KIT cod.3015400601R