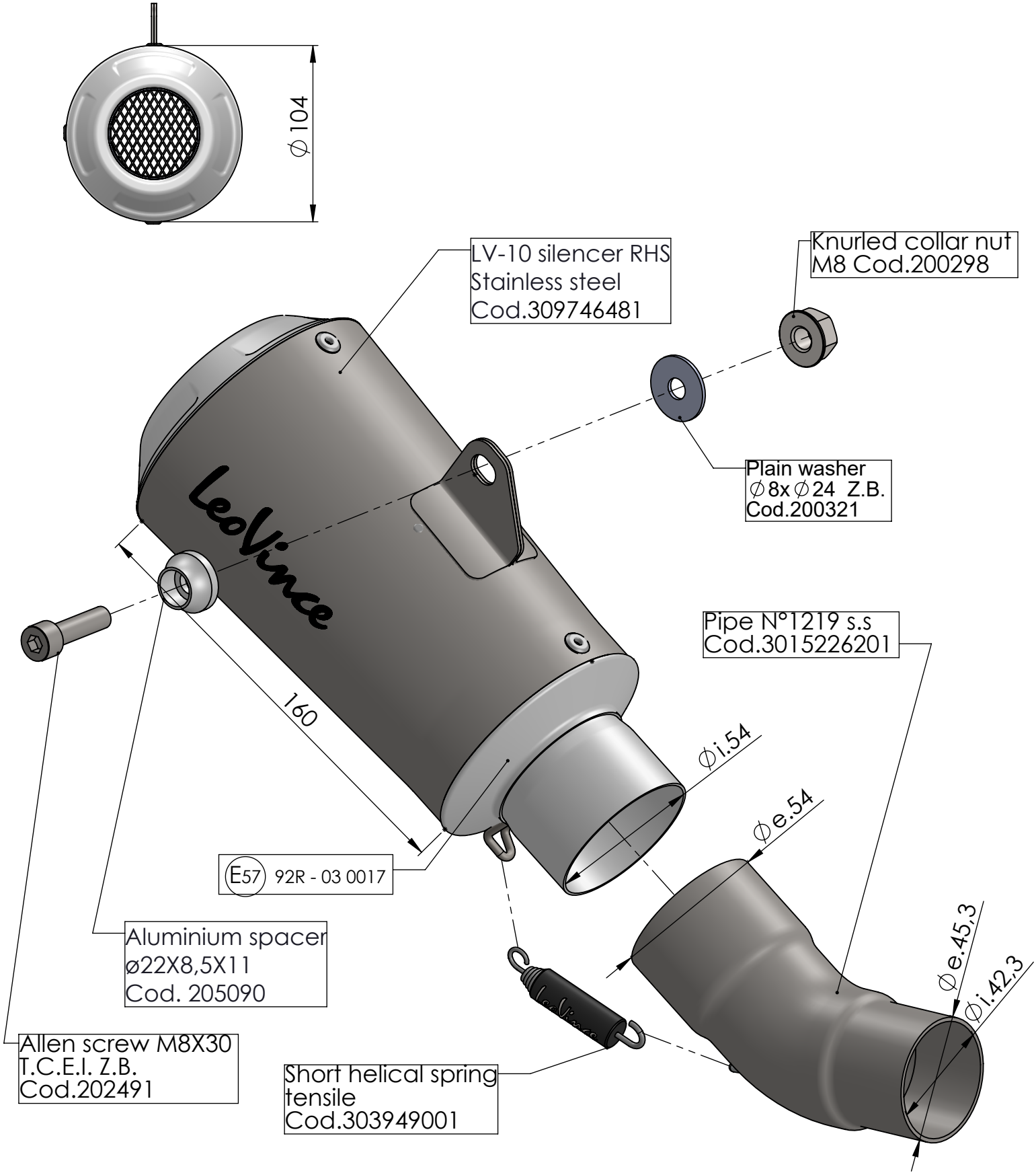

ART. 15226

BENELLI LEONCINO / TRAIL 500

SLIP-ON - LV 10 - STAINLESS S.- APPROVED