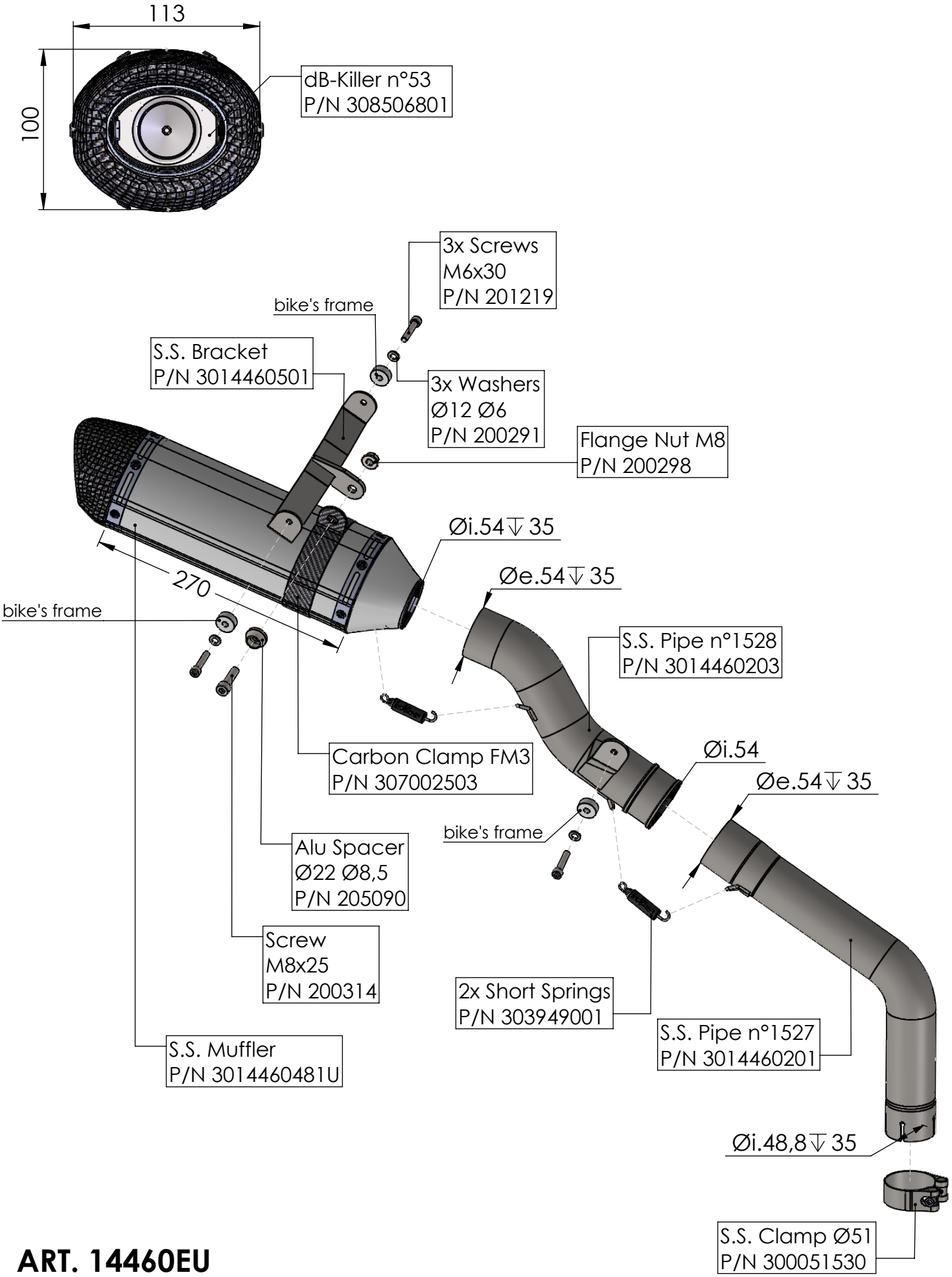

ART. 14460EU

HONDA CBR 600 RR

SLIP-ON LV ONE EVO STAINLESS STEEL