FITTING INSTRUCTIONS FOR CP0599 AERO CRASH PROTECTORS



THIS KIT CONTAINS THE ITEMS PICTURED AND LABELLED OVER PAGE.

SOME PARTS MAY BE SHOWN FOR CLARITY OF INSTRUCTIONS ONLY.

DO NOT PROCEED UNTIL YOU ARE SURE ALL PARTS ARE PRESENT.

PLEASE READ ALL INSTRUCTIONS BEFORE PROCEEDING.

IF IN ANY DOUBT WHEN FITTING OUR PRODUCTS, CONSULT ONE OF OUR DEALERS OR HAVE FITTED BY A QUALIFIED TECHNICIAN.

Racing Technique Ltd T/A R&G
Unit 1, Shelley's Lane, East Worldham, Alton, Hampshire, GU34 3AQ
Tel: +44 (0)1420 89007 www.rg-racing.com Email: info@rg-racing.com

TOOLS REQUIRED	**GENERAL TORQUE SETTINGS**
• SOCKET SET W/ 14mm SOCKET, DEEP 17mm SOCKET & 17mm SOCKET. • TORQUE WRENCH CAPABLE OF 40Nm. • METRIC ALLEN BIT SET. • SUITABLE JACK WITH SOFT SUPPORT AREA (TO SUPPORT ENGINE WHILE MOUNTING BOLTS REMOVED).	M4 BOLT = 8Nm M5 BOLT = 12Nm M6 BOLT = 15Nm M8 BOLT = 20Nm M10 BOLT = 40Nm M12 BOLT = 40Nm

LEGEND

ITEM NO.	Part Number	Description	QTY
ITEM 1	MP0304	MOUNTING PLATE (RHS)	1
ITEM 2	S1217	74mm SINGLE DIAMETER SPACER (LHS)	1
ITEM 3	S1663	TWO DIAMETER SPACER (RHS)	1
ITEM 4	S1105	39mm SINGLE DIAMETER SPACER (RHS)	1
ITEM 5	B0063	M12 AERO CRASH BOBBIN	2
ITEM 6	BC0002	AERO BOBBIN CAPS	2
ITEM 7	M12x1.25x140mm	HEX HEAD BOLT - LHS BOBBIN MOUNT	1
ITEM 8	M12x1.25x80mm	HEX HEAD BOLT - RHS BOBBIN MOUNT	1
ITEM 9	M12x1.25x60mm	HEX HEAD BOLT - RHS UPPER MOUNTING PLATE	1
ITEM 10	M8x1.25x35mm	HEX HEAD BOLT - RHS LOWER MOUNTING PLATE	1
ITEM 11	M12x1.25mm	NYLOC NUT	1
ITEM 12	LW0001	M12 SHAKE PROOF WASHER	2
ITEM 13	12x24mm	FLAT WASHER	4
ITEM 14	8x16mm	FLAT WASHER	1
ITEM 15	NC0002	M12 HEX HEAD CAP - RHS BRACKET UPPER BOLT	1
ITEM 16	S1091	5mm SPACER (LHS UNDER BOLT HEAD)	1

ASSEMBLY DIAGRAM – LHS

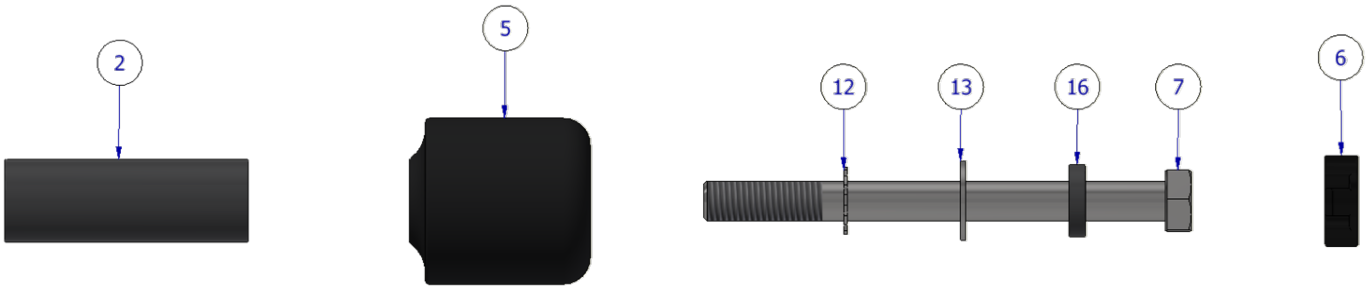

ASSEMBLY DIAGRAM – RHS

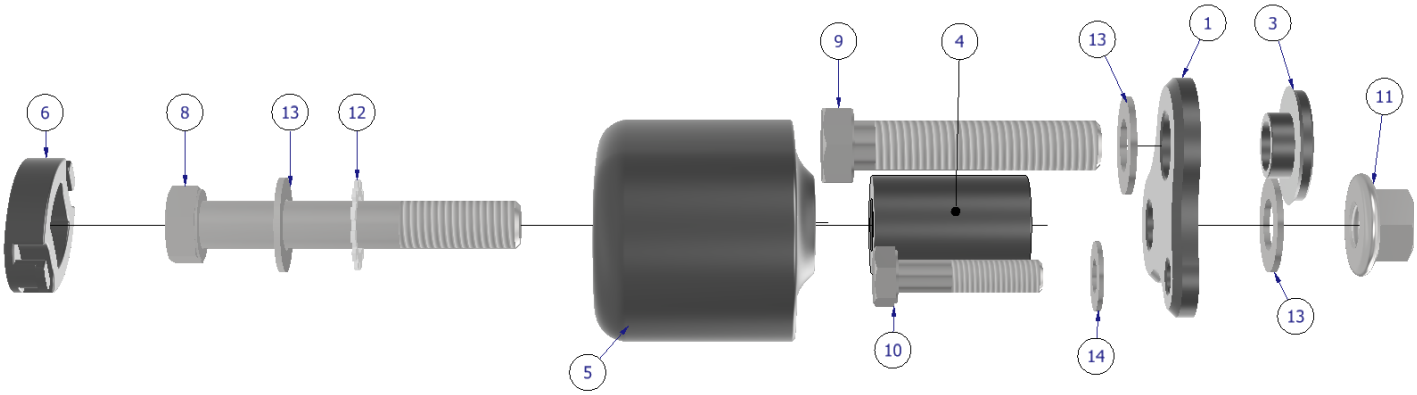

Racing Technique Ltd T/A R&G
Unit 1, Shelley's Lane, East Worldham, Alton, Hampshire, GU34 3AQ
Tel: +44 (0)1420 89007 www.rg-racing.com Email: info@rg-racing.com

AERO-STYLE CRASH PROTECTOR ORIENTATION



FITTING PICTURES

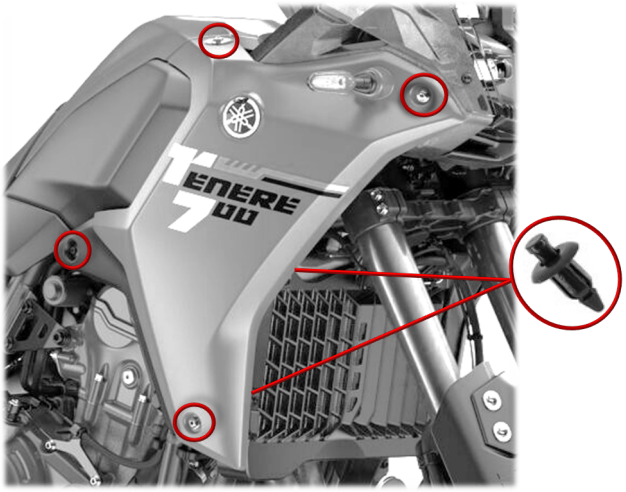

PICTURE 1

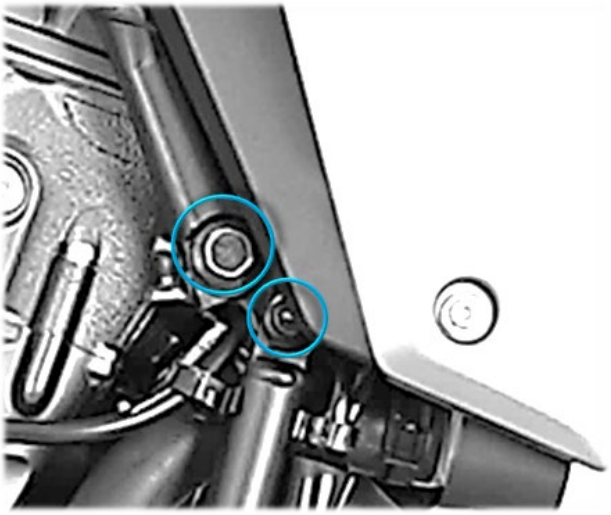

PICTURE 2

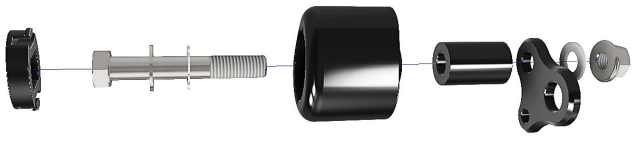

PICTURE 3

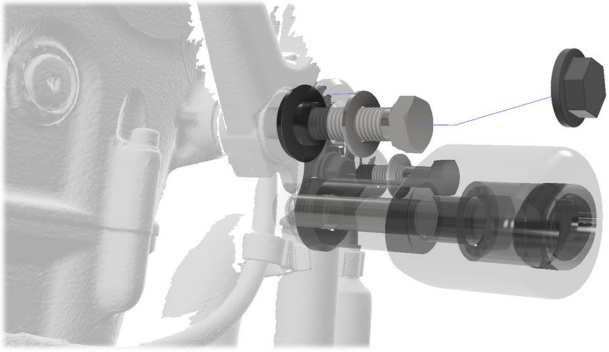

PICTURE 4

Racing Technique Ltd T/A R&G
Unit 1, Shelley's Lane, East Worldham, Alton, Hampshire, GU34 3AQ
Tel: +44 (0)1420 89007 www.rg-racing.com Email: info@rg-racing.com

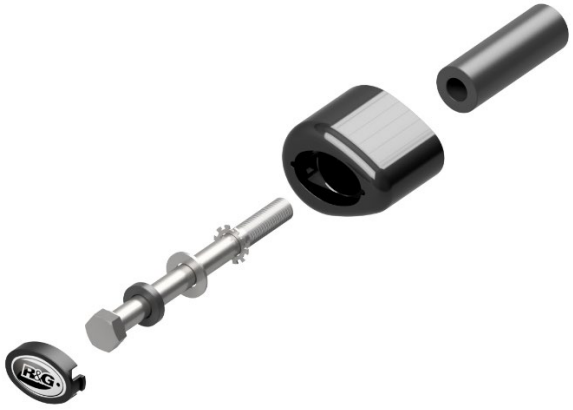

PICTURE 5



PICTURE 6

FITTING INSTRUCTIONS

PLEASE NOTE THAT BEFORE BEGINNING, YOU WILL NEED A SUITABLE JACK TO SUPPORT THE ENGINE WHEN REMOVING OEM ENGINE BOLTS. IF YOU ARE NOT COMFORTABLE CARRYING OUT THIS PROCEDURE, HAVE FITTED BY A QUALIFIED TECHNICIAN. READ ALL STEPS BEFORE PROCEEDING.

Installation of RHS Mounting Plate:

- To begin with the installation, support the engine with a suitable jack.
- Remove the outer RHS fairing panel, by removing the 4X fasteners highlighted red in **Picture 1** including the pop clips on the inside of the panel (around the radiator shroud).
- Disconnect the indicator connector and store the panel away safely for the rest of the fitting process.
- Remove the fasteners holding the inner panel in place, this will allow you to manoeuvre the inner panel out of the way or remove completely if preferred.

Please note: *To keep the engine properly aligned, support the bottom of the engine with a small jack, applying light pressure to the sump with a rubber or wooden pad between to avoid damage.*

- Remove the two bolts circled in blue in **Picture 2**.
- Keeping the OEM spacer found behind the larger bolt in its original position.
- Gather the parts required for the right-hand side assembly as shown in the **RHS Assembly Diagram** on **Page 3**.
    - **Item 1**: Mounting plate
    - **Item 3**: Two diameter spacer - Mounting plate
    - **Item 4**: 39mm Single diameter - Bobbin
    - **Item 5**: Crash bobbin
    - **Item 6**: Bobbin cap
    - **Item 8**: M12x1.25x80mm Hex head bolt - Bobbin
    - **Item 9**: M12x1.25x60mm Hex head bolt - RHS Upper mounting plate
    - **Item 10**: M8x1.25x35mm Hex head bolt - RHS Lower mounting plate

- **Item 11**: M12 Nyloc nut
- **Item 12**: M12 Shake proof washer
- **Item 13**: 12x24mm Flat washer
- **Item 14**: 8X16mm Flat washer

- Offer the mounting plate, space and bobbin up to the mounting holes, mark or note the angle the bobbin needs to sit at.
- As shown in **Picture 3**, use the appropriate socket and spanner to attach the bobbin and spacer to the mounting plate at the angle you measured in the previous step. Using Parts:
  - **Item 8**: M12x80mm Hex head bolt
  - **Item 11**: M12 Nyloc nut
  - **Item 12**: M12 Shake proof washer
  - **Item 13**: 2X M12 Flat washers

- Now the bobbin has been affixed to the mounting plate, offer the assembly up to the frame as shown in **Pictures 3 & 4** and hand tighten the M12x60mm & M8x35mm bolts, making sure the OEM spacer removed earlier and the provided two diameter spacer (**Item 3**) are both used behind the M12 bolt.
- Tighten both bolts to the manufacturers torque specifications and apply the bolt cap to the M12 bolt head.
- Re-attach the fairing panels.
- Check the angle of the bobbin is correct then apply the bobbin cap.

Installation of LHS:

- Gather the parts required for the left-hand side assembly as shown in the **LHS Assembly Diagram** on **Page 3**:
  - **Item 2**: 74mm Spacer - Bobbin
  - **Item 5**: Crash Bobbin
  - **Item 6**: Bobbin Cap
  - **Item 7**: M12x1.25x140mm Hex head bolt
  - **Item 12**: M12 Lock washer
  - **Item 13**: M12 Flat washer
  - **Item 16**: 5mm Spacer

- With the jack still supporting the engine, remove the OEM bolt from the frame.
- Loosely assemble the parts as shown in the **LHS Assembly Diagram** (with the exception of the bobbin cap).
- See **Pictures 5 & 6**
- Align the bobbin facing forward and thread in the bolt. Torque to spec, taking care not to cross thread.
- Check the angle of the bobbin is correct then apply the bobbin cap.

ISSUE 2 - 18/08/2026 (MH)

CONSUMER NOTICE

The catalogue description and any exhibition of samples are only broad indications of the Products and R&G may make design changes which do not diminish their performance or visual appeal and supplying them in such state shall conform to the order. The Buyer acknowledges no representation or warranty (other than as to title) has been given or will apply to the Products other than those in R&G's order or confirmation and the Buyer confirms it has chosen the Products as being of merchantable quality and suitable for its

particular purposes. Where R&G fits the Products or undertakes other services it shall exercise reasonable skill and care and rectify any fault free of charge unless the workmanship has been disturbed. The Buyer is responsible for ensuring that the warranty on the motorcycle is not affected by the fitting of the Products. On return of any defective Products R&G shall at its option either supply a replacement or refund the purchase money but shall not be liable if the Products have been modified or used or maintained otherwise than in accordance with R&G's or manufacturer's instructions and good engineering practice or if the defect arises from accident or neglect. Other than identified above and subject to R&G not limiting its liability for causing death and personal injury, it shall not be liable for indirect or consequential loss and otherwise its liability shall be limited to the amounts paid by the Buyer for the Products or the fitting or service concerned. These terms do not affect the Buyer's statutory rights.

R&G RETURNS POLICY (NON-FAULTY GOODS)

Returns must be pre-authorised (if not pre-authorised the return will be rejected). Goods may only be returned direct to us if they were purchased direct from us (customer must prove if necessary). Otherwise to be returned to original vendor. Goods must be in re-sellable condition, in the opinion of R&G. All returns are subject to a 25% restocking and handling fee (25% of the gross value exc. P&P – at the prevailing price at time of purchase). The customer must pay any and all carriage charges. No returns of discontinued products, unless within 14 days of purchase. This policy does not affect your statutory rights and does not refer to faulty goods.