ANBAUANLEITUNG

mounting instructions • instructions de montage • instrucciones de montaje • istruzioni di montaggio

BC.HTA.00.501.35100

beinhaltet • contains • contient • contiene • contiene

BC.HTA.00.502.15000/B

BC.HTA.00.503.15000/B

BC.HTA.00.504.15000/B

BC.HTA.00.505.15000

BC.HTA.00.505.15100

HTA.00.501.15100/B

HTA.00.509.15000

SW-MOTECH®

Item number: **BC.HTA.00.502.15000/B**	Revision: **00** · Date: **10 - 2026**

PEAX Rackless Holster Set

~ 2 h.	**EASY** **DIFFICULT**

ENGLISH · Thank you for choosing an SW-MOTECH product. Further information (e.g., vehicle and model compatibility) can be found in our online store. Depending on the product and market, the relevant approval documents (e.g., type approval) are available for download there, if applicable. Before installation, please check whether use on public roads is permitted in your country or state and whether any permits or registrations are required. The information provided in these mounting instructions regarding the estimated installation time (h: hour) and difficulty level (1: very easy; 2: easy; 3: moderate; 4: challenging; 5: very challenging) are non-binding guidelines and depend on individual skills, prior knowledge, the tools used, and the condition of the vehicle. To avoid personal injury and property damage, read and follow all instructions and warnings in these mounting instructions before installation and use. Keep the instructions for future reference. Additional information and detailed warranty and guarantee regulations can be found in our General Terms and Conditions on our website.
This product is designed for vehicles in original condition (basic configuration). Compatibility with factory options/special upgrades, original accessories from the vehicle manufacturer and/or third-party accessories is not guaranteed; the model designations published in our online store are decisive. These mounting instructions were created to the best of our knowledge and according to the current state of knowledge at the time of publication. We reserve the right to correct any printing errors as well as content errors and make technical or design changes to the product and instructions; the most up-to-date version can be found in our online store. To the extent permitted by law, we are not liable for any damage resulting from the use of incorrect or incomplete information in these mounting instructions. The copyright for these mounting instructions belongs to SW-MOTECH.

WARNING SYMBOLS

The warning symbols used in these mounting instructions (⚠/⚠) indicate life-threatening situations, risks of injury and other hazards. Key words such as **DANGER**, **WARNING**, **CAUTION** or ***NOTE*** appear together with the aforementioned warning symbols and indicate important safety instructions for the installation and use of this product. When combined with warning symbols, these key words have the following meaning:
⚠ **DANGER:** Indicates a dangerous situation that will lead to death or serious injury if unheeded!
⚠ **WARNING:** Indicates a potentially dangerous situation that could result in death or serious injury if unheeded!
⚠ **CAUTION:** Indicates a potentially dangerous situation that could result in minor or moderate injury if unheeded!
⚠ ***NOTE:*** Indicates important information that will not lead to risk of death or injury; failure to heed it may result in property damage.

GENERAL INFORMATION

⚠ WARNING: Installation and maintenance of this product requires advanced technical knowledge, proper tools and safe handling of tools and tightening torque specifications! For safety reasons, SW-MOTECH recommends having all work carried out by a qualified professional in a workshop!
⚠ WARNING: If installing the product yourself, read and understand these mounting instructions completely before installation and use, and follow all instructions! Additionally, observe all relevant vehicle manufacturer specifications during installation and use! If any section of these mounting instructions is unclear or you require clarification, do not begin installation; discontinue any work already started and contact SW-MOTECH or a workshop with qualified professionals!

PREPARATION: Ensure a clean, level and well-lit work surface. Sort all product parts and check them against the parts list for completeness and integrity. Gather the necessary tools.
⚠ CAUTION: Ensure the vehicle is securely parked (on a level, firm surface). Switch off the engine and remove the ignition key. Allow the engine and exhaust to cool completely. When working on the electrical system, disconnect the battery (start with the negative terminal). Use appropriate tools and always wear safety glasses and gloves during installation and maintenance. Have a second person assist you with installation.

INSTALLATION: All disassembled vehicle parts and connections must be reassembled according to the vehicle manufacturer's specifications or, if specified in these mounting instructions, replaced with SW-MOTECH parts.
⚠ WARNING: Only use liquid thread locker if explicitly instructed in these mounting instructions or in the vehicle manufacturer's specifications to prevent threaded connections from loosening on their own! Do not apply liquid thread locker to plastic parts or use it in areas where the vehicle manufacturer prohibits it!
⚠ DANGER: Tightening torques not specified in these mounting instructions must be taken from the vehicle manufacturer's specifications or determined by qualified workshop professionals! Tightening torques incorrectly may lead to broken components and serious injury!

FUNCTIONAL CHECK: After mounting, ensure that no moving parts are blocked and that vehicle functionality is not impaired. Cables, lines, and hoses must never rub against each other, be squeezed or excessively taut. Check this while the steering wheel is at full lock and throughout the entire suspension travel.
⚠ WARNING: Perform a complete functional check before starting your journey. After the first 50 km, and then at regular intervals, check all fasteners for a secure fit and correct torque and retighten if necessary. Mounted accessories may affect handling and stability; conduct a careful test drive first and adjust your driving style accordingly!

STORAGE: When not in use, store the product in a dry, clean and weatherproof location.

DISPOSAL: Dispose of the product and packaging in an environmentally responsible manner in accordance with any applicable regulations at a suitable recycling or collection point. In particular, separate any electrical/electronic components and taken them to a specialized collection point. Be aware of local disposal regulations and follow them. To avoid waste, prioritize repair or reuse and properly separate materials by type.

SW-MOTECH GmbH & Co. KG
Ernteweg 7-10
35282 Rauschenberg
Germany

info@sw-motech.com
www.sw-motech.com

The content translation is automated.
© SW-MOTECH GmbH & Co. KG

Errors and omissions excepted
Subject to technical and design changes.



Take note of the symbols and what they mean in the ASSEMBLY section. If the term OEM appears in the ASSEMBLY section, the vehicle manufacturer's specifications must be observed and applied.



If you have any questions, please don't hesitate to contact our Customer Service team or our distributors. You can find our telephone number and a list of our distributors in our online shop:
www.sw-motech.com

The content translation is automated.
© SW-MOTECH GmbH & Co. KG

Errors and omissions excepted
Subject to technical and design changes.

3

1



BC.HTA.00.502.005R.00

1/1

2



BC.HTA.00.502.005L.00

1/1

3



BC.HTA.00.502.002R.00

1/1

4



BC.HTA.00.502.002L.00

1/1

4

5



BC.HTA.00.501.010.02

6/6

6



BC.ZUB.00.004.30000

1/1

The content translation is automated.
© SW-MOTECH GmbH & Co. KG

Errors and omissions excepted
Subject to technical and design changes.

1

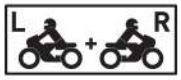

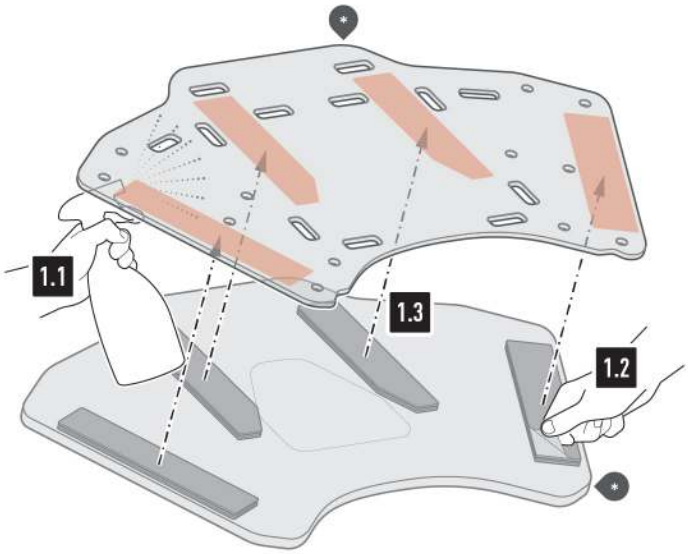

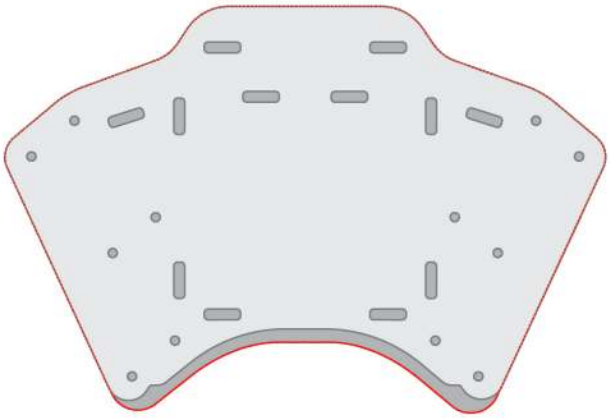

⚠ WARNING: Always wear eye and hand protection!
⚠ WARNING: Always use suitable tools!

⚠ WARNING: Since this is a universal product, please make sure that the product can be attached and used correctly and properly on your vehicle type BEFORE using for the first time!

1.1 - Thoroughly clean the underside of the center plate (•) to remove any grease and dirt residue.

1.2 - The Velcro strips for the center plate (•) are attached to the ones on the foam plate (•); remove the film from these Velcro strips.

1.3 - Now press the center plate (•) flush with the top part and side contours onto the foam plate (•) as well as the adhesive surface of the Velcro strips, as shown in the illustration on the right.
Allow components to rest so that the adhesive surfaces can bond.



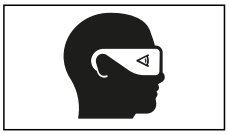



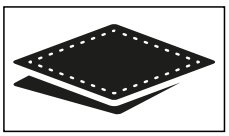

The content translation is automated.
© SW-MOTECH GmbH & Co. KG

Errors and omissions excepted
Subject to technical and design changes.

2

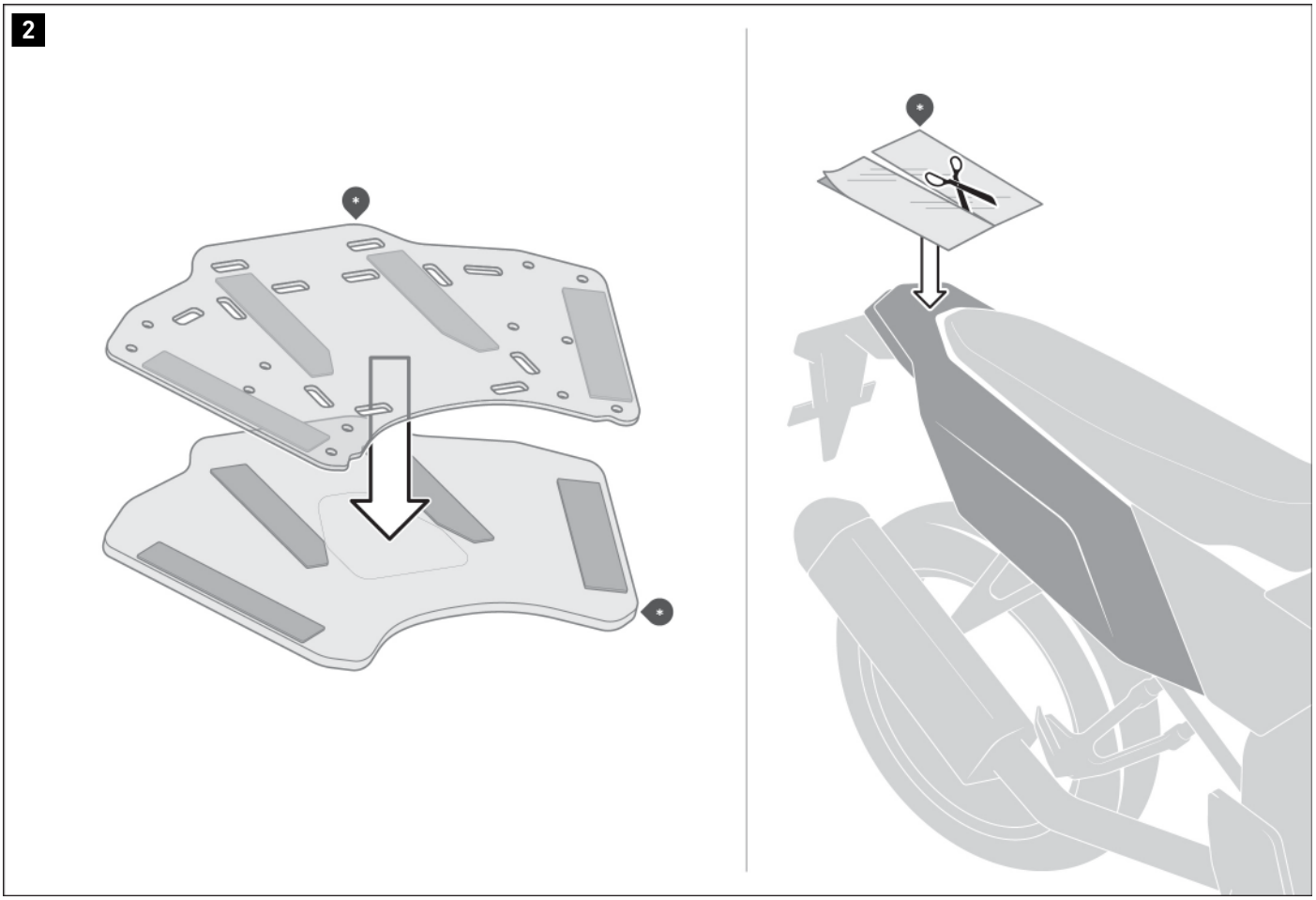

Remove the foam plate (•) from the center plate (•).

⚠ ***NOTE:*** *Protect vehicle parts susceptible to abrasion with adhesive protective foil (•), as the plates and/or their components could come into contact with these parts. Since this is a universal product, please determine the contact surface on your vehicle beforehand.*

Thoroughly clean the surfaces to be covered of any grease and dirt residue.

Cut out the protective adhesive foil (•) depending on the contact surface.
⚠ **WARNING: Risk of injury!**

Apply the adhesive protective foil (•) to **both sides** of the contact surfaces on the plates.



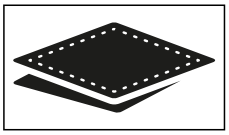



The content translation is automated.
© SW-MOTECH GmbH & Co. KG

Errors and omissions excepted
Subject to technical and design changes.

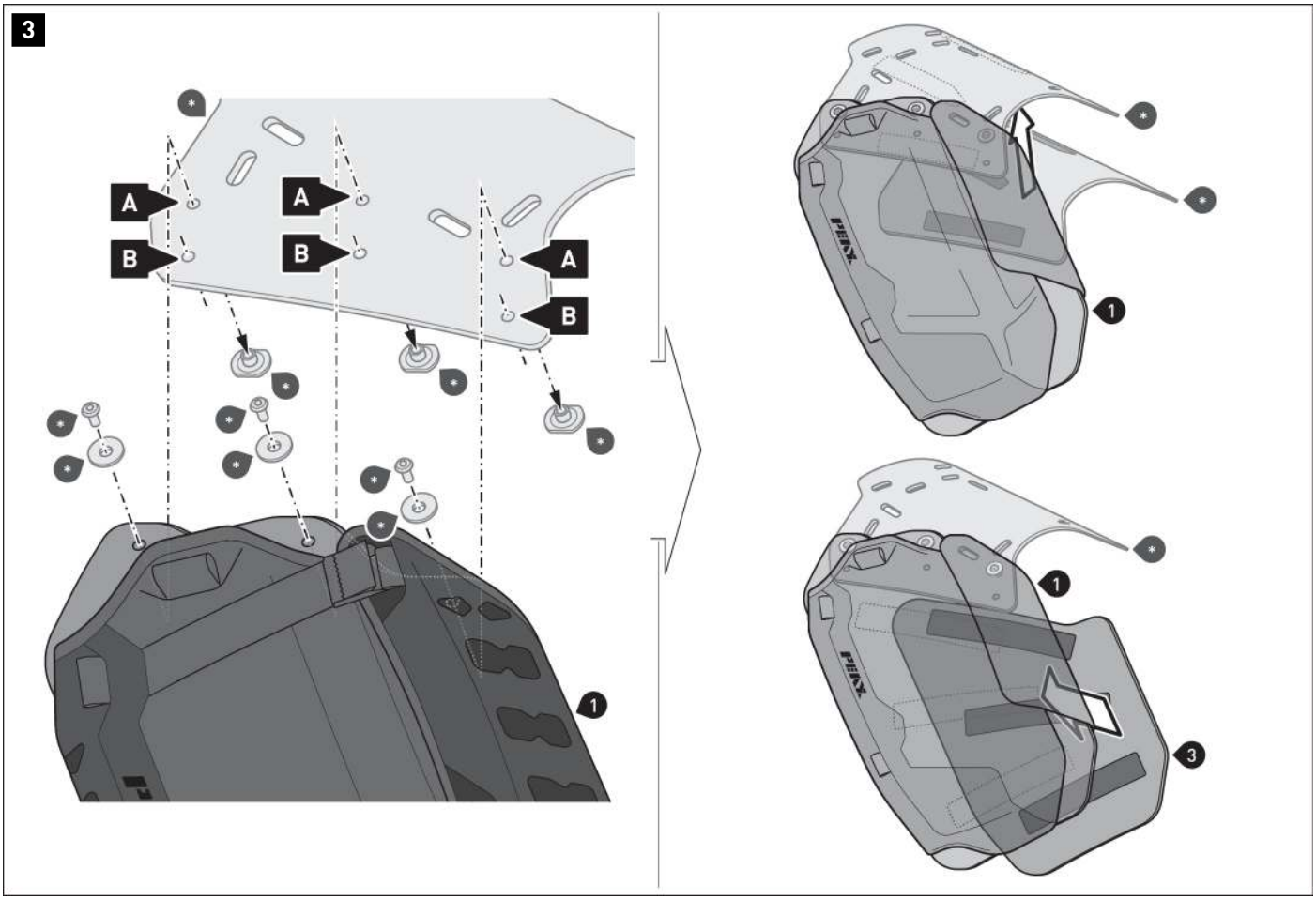

⚠ ***NOTE:*** *Screw the holsters (1/2) adapted to the dimensions of your vehicle's rear to the mounting positions marked (A) or (B).*

Screw the holsters (1/2) to **both sides** of the center plate (•).
⚠ **WARNING: Use liquid threadlocker!**
Tighten the screws (•) as specified in the mounting instructions (Item no.: HTA.00.509.1500•).

Then mount foam plates (•) and (3/4) using the Velcro strips onto the center plate (•) as well as the side plates (1/2).









The content translation is automated.
© SW-MOTECH GmbH & Co. KG

Errors and omissions excepted
Subject to technical and design changes.

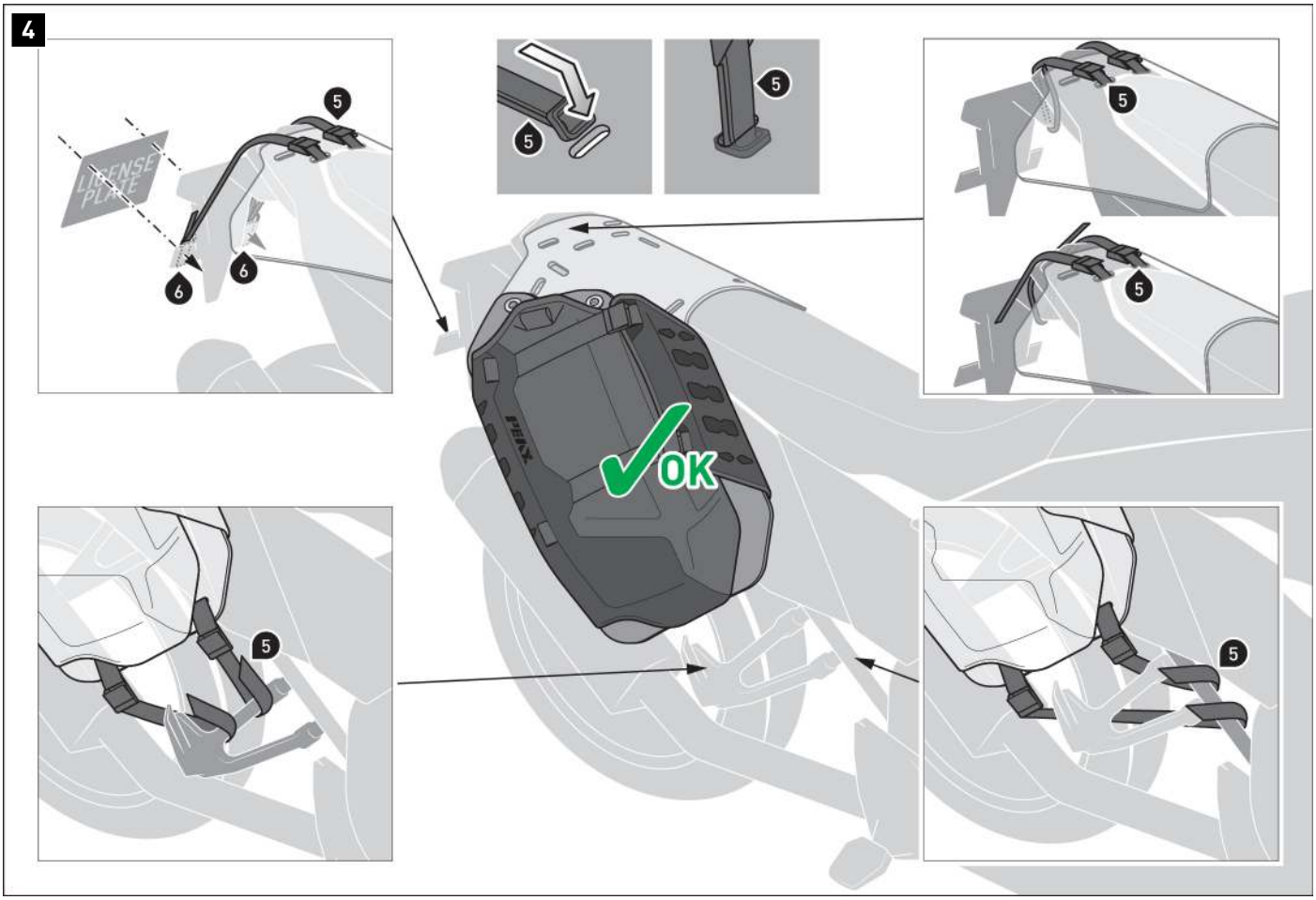

⚠ ***NOTE:*** *For heavy-duty license plate holders, SW-MOTECH recommends attachment to the lashing eyes (6). Using the original screws, screw the lashing eyes (6) behind the license plate.*

The fastening straps (5) are attached to the plates by inserting them into the recesses, as shown in the detailed illustration above.

Loop the fastening straps (5) to **SIX** suitable and durable mounting points on **both sides** of the vehicle (e.g. footrest mount, vehicle frame, tail etc.).

⚠ WARNING: The mounting points must be chosen so that the holsters (1/2) are securely in place and won't slip! To do so, secure the center plate (-) to the rear and the holsters (1/2) to the front!

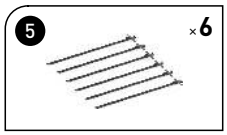



© SW-MOTECH GmbH & Co. KG

Errors and omissions excepted
Subject to technical and design changes.

5

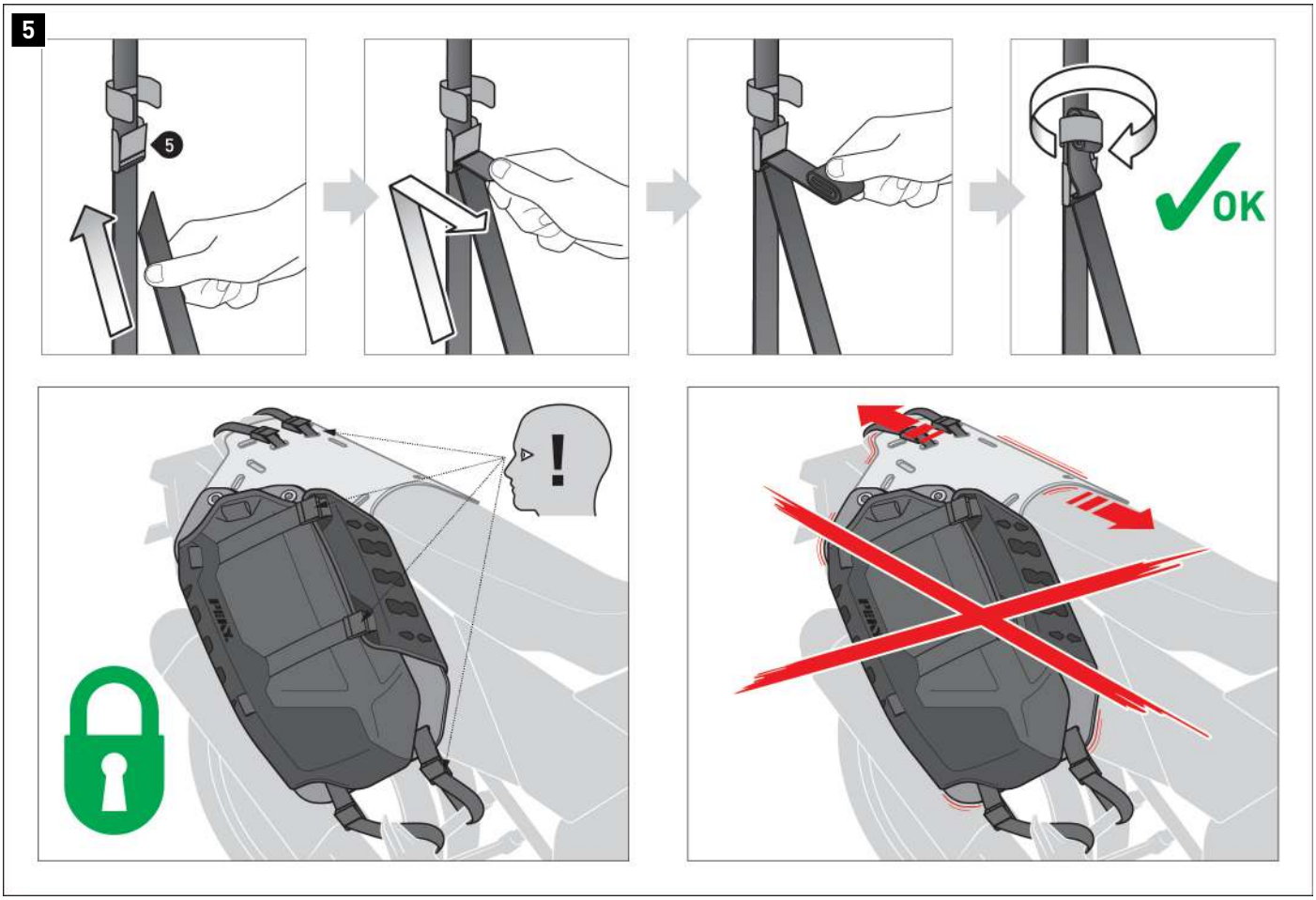

Now attach the ends of the **SIX** fastening straps (5) on **both sides** to the buckles.
Tighten all fastening straps until the holster (1/2) and center plate (·) are securely attached to the vehicle.
Secure the excess length of the fastening straps (5) with the Velcro strips.

⚠ ***NOTE:*** *Shorten any excess length of the fastening straps (·) if necessary. Ensure that the ends of the fastening straps (·) are sealed with a lighter.*

⚠ WARNING: Regularly check that the product is securely in place, as described in the FUNCTIONAL CHECK section on page 1.

The content translation is automated.
© SW-MOTECH GmbH & Co. KG

Errors and omissions excepted
Subject to technical and design changes.

6

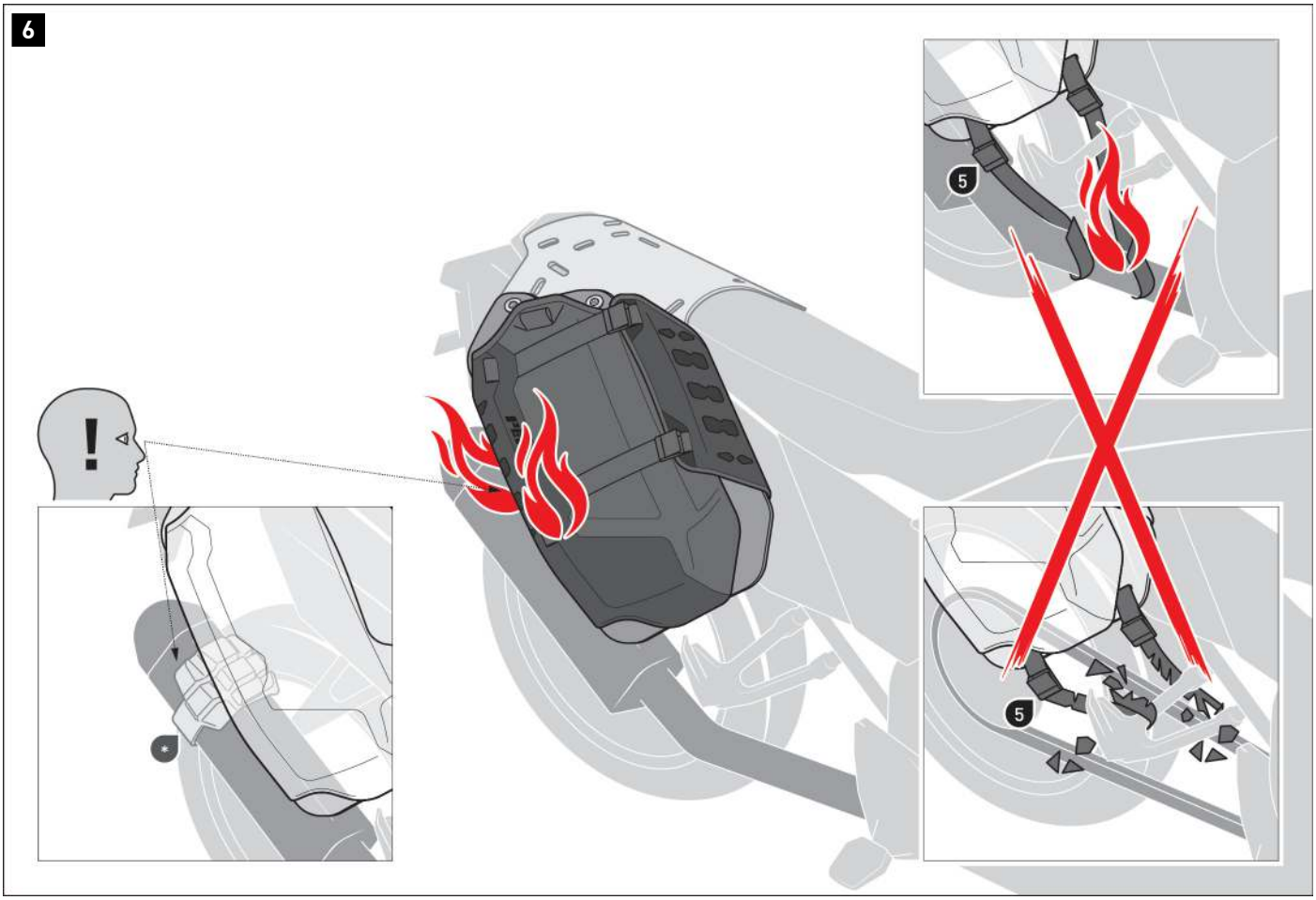

⚠ WARNING: Ensure that no components come into contact with hot and moving vehicle parts!
Also ensure that all components are at least 5 cm away from hot parts and from the hot exhaust flow.
After installation, ensure that this clearance is maintained in every suspension state of the bike.

If the minimum distance cannot be maintained, a heat shield (•) must be installed on the muffler. Refer to the heat shield mounting instructions (Item no.: BC.HTA.00.504.1500•) for information regarding alignment and installation.

The content translation is automated.
© SW-MOTECH GmbH & Co. KG

Errors and omissions excepted
Subject to technical and design changes.

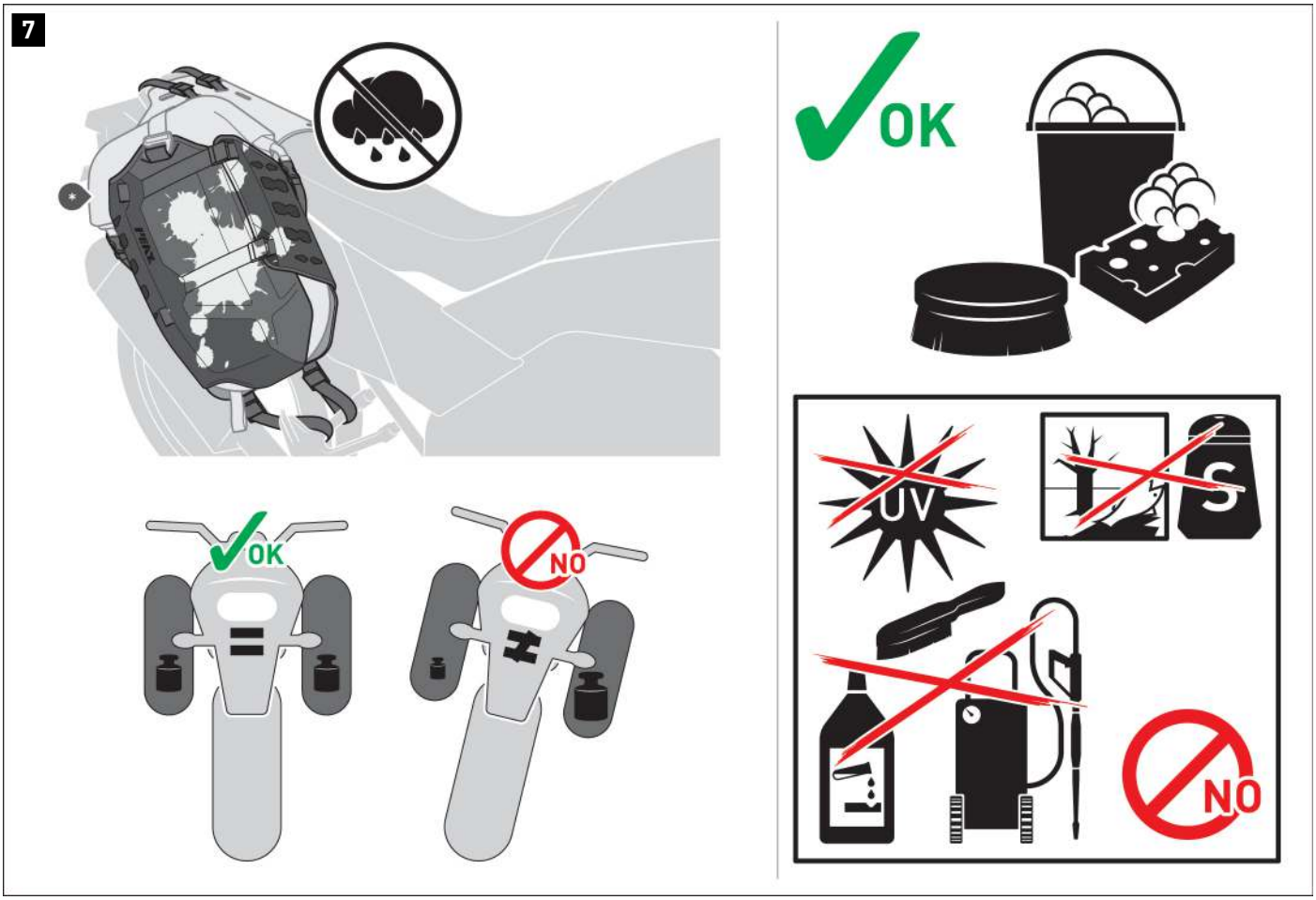

CARE

For cleaning, use **ONLY** a soft textile brush, a cloth or a sponge and warm soapy water! Then rinse with clean water.

DO NOT use harsh cleaning agents, abrasive cleaning utensils or high-pressure cleaners! Be sure to clean the tail bag after winter rides to avoid damage caused by salt.

⚠ ***NOTE:*** *Surface materials may be damaged by prolonged and intensivesolar radiation and environmental influences (e.g. smog, acid rain) Subject to colour changes (fading). SW-MOTECH assumes no liability for this.*

LOADING

⚠ ***NOTE:*** *Make sure the load is evenly distributed! Ensure that the load is securely in place and won't shift during transport!*

⚠ ***NOTE:*** *Make sure never to stow sharp-edged, pointed or similar objects that could cause personal injury or damage to the vehicle or holster!*

⚠ ***NOTE:*** *Always use the waterproof side bag (·) to protect your luggage from moisture!*

⚠ ***NOTE:*** *Attach only the designated SW-MOTECH products to the MOLLE system!*

⚠ ***NOTE:*** *Reduce load when driving off-road.*

The content translation is automated.
© SW-MOTECH GmbH & Co. KG

Errors and omissions excepted
Subject to technical and design changes.

PRODUCT-SPECIFIC NOTES

⚠ ***NOTE:*** *Observe the country-specific regulations for the registration/operation of your vehicle and any applicable TÜV regulations. Have any parts requiring registration entered in the vehicle documents by your inspection centre after they have been installed.*

⚠ DANGER: Since this is a universal product, please be sure to check that the product can be properly and correctly attached to and used on your vehicle model before using it for the first time! After mounting, check that all vehicle components are unobstructed and can function properly! Lights such as taillights and turn light indicators must not be impeded in their function! Cables, wires, and hoses should not rub and/or squeeze against anything!

⚠ DANGER: Carry out a comprehensive check to ensure everything functions properly before departure!

⚠ DANGER: Ensure that the product is properly positioned before departure and at every rest stop (every 200 km)!

⚠ DANGER: The driving/braking behavior of the motorcycle changes noticeably after mounting this product!

⚠ DANGER: Lean angle and ground clearance may be restricted by this product!

⚠ DANGER: The maximum vehicle load specified by the vehicle manufacturer remains applicable!

see LOAD	≤ 130km/h (≤ 80mph)

© SW-MOTECH GmbH & Co. KG

Errors and omissions excepted
Subject to technical and design changes.

Item number: **BC.HTA.00.503.15000/B**	Revision: **00** · Date: **10 - 2026**

PEAX Rackless Beaver Tail

~ 1 h.	**EASY** **DIFFICULT**

ENGLISH · Thank you for choosing an SW-MOTECH product. Further information (e.g., vehicle and model compatibility) can be found in our online store. Depending on the product and market, the relevant approval documents (e.g., type approval) are available for download there, if applicable. Before installation, please check whether use on public roads is permitted in your country or state and whether any permits or registrations are required. The information provided in these mounting instructions regarding the estimated installation time (h: hour) and difficulty level (1: very easy; 2: easy; 3: moderate; 4: challenging; 5: very challenging) are non-binding guidelines and depend on individual skills, prior knowledge, the tools used, and the condition of the vehicle. To avoid personal injury and property damage, read and follow all instructions and warnings in these mounting instructions before installation and use. Keep the instructions for future reference. Additional information and detailed warranty and guarantee regulations can be found in our General Terms and Conditions on our website.
This product is designed for vehicles in original condition (basic configuration). Compatibility with factory options/special upgrades, original accessories from the vehicle manufacturer and/or third-party accessories is not guaranteed; the model designations published in our online store are decisive. These mounting instructions were created to the best of our knowledge and according to the current state of knowledge at the time of publication. We reserve the right to correct any printing errors as well as content errors and make technical or design changes to the product and instructions; the most up-to-date version can be found in our online store. To the extent permitted by law, we are not liable for any damage resulting from the use of incorrect or incomplete information in these mounting instructions. The copyright for these mounting instructions belongs to SW-MOTECH.

WARNING SYMBOLS

The warning symbols used in these mounting instructions (⚠/⚠) indicate life-threatening situations, risks of injury and other hazards. Key words such as **DANGER**, **WARNING**, **CAUTION** or ***NOTE*** appear together with the aforementioned warning symbols and indicate important safety instructions for the installation and use of this product. When combined with warning symbols, these key words have the following meaning:
⚠ **DANGER:** Indicates a dangerous situation that will lead to death or serious injury if unheeded!
⚠ **WARNING:** Indicates a potentially dangerous situation that could result in death or serious injury if unheeded!
⚠ **CAUTION:** Indicates a potentially dangerous situation that could result in minor or moderate injury if unheeded!
⚠ ***NOTE:*** Indicates important information that will not lead to risk of death or injury; failure to heed it may result in property damage.

GENERAL INFORMATION

⚠ WARNING: Installation and maintenance of this product requires advanced technical knowledge, proper tools and safe handling of tools and tightening torque specifications! For safety reasons, SW-MOTECH recommends having all work carried out by a qualified professional in a workshop!
⚠ WARNING: If installing the product yourself, read and understand these mounting instructions completely before installation and use, and follow all instructions! Additionally, observe all relevant vehicle manufacturer specifications during installation and use! If any section of these mounting instructions is unclear or you require clarification, do not begin installation; discontinue any work already started and contact SW-MOTECH or a workshop with qualified professionals!

PREPARATION: Ensure a clean, level and well-lit work surface. Sort all product parts and check them against the parts list for completeness and integrity. Gather the necessary tools.
⚠ CAUTION: Ensure the vehicle is securely parked (on a level, firm surface). Switch off the engine and remove the ignition key. Allow the engine and exhaust to cool completely. When working on the electrical system, disconnect the battery (start with the negative terminal). Use appropriate tools and always wear safety glasses and gloves during installation and maintenance. Have a second person assist you with installation.

INSTALLATION: All disassembled vehicle parts and connections must be reassembled according to the vehicle manufacturer's specifications or, if specified in these mounting instructions, replaced with SW-MOTECH parts.
⚠ WARNING: Only use liquid thread locker if explicitly instructed in these mounting instructions or in the vehicle manufacturer's specifications to prevent threaded connections from loosening on their own! Do not apply liquid thread locker to plastic parts or use it in areas where the vehicle manufacturer prohibits it!
⚠ DANGER: Tightening torques not specified in these mounting instructions must be taken from the vehicle manufacturer's specifications or determined by qualified workshop professionals! Tightening torques incorrectly may lead to broken components and serious injury!

FUNCTIONAL CHECK: After mounting, ensure that no moving parts are blocked and that vehicle functionality is not impaired. Cables, lines, and hoses must never rub against each other, be squeezed or excessively taut. Check this while the steering wheel is at full lock and throughout the entire suspension travel.
⚠ WARNING: Perform a complete functional check before starting your journey. After the first 50 km, and then at regular intervals, check all fasteners for a secure fit and correct torque and retighten if necessary. Mounted accessories may affect handling and stability; conduct a careful test drive first and adjust your driving style accordingly!

STORAGE: When not in use, store the product in a dry, clean and weatherproof location.

DISPOSAL: Dispose of the product and packaging in an environmentally responsible manner in accordance with any applicable regulations at a suitable recycling or collection point. In particular, separate any electrical/electronic components and taken them to a specialized collection point. Be aware of local disposal regulations and follow them. To avoid waste, prioritize repair or reuse and properly separate materials by type.

SW-MOTECH GmbH & Co. KG
Ernteweg 7-10
35282 Rauschenberg
Germany

info@sw-motech.com
www.sw-motech.com

The content translation is automated.
© SW-MOTECH GmbH & Co. KG

Errors and omissions excepted
Subject to technical and design changes.



Take note of the symbols and what they mean in the ASSEMBLY section. If the term OEM appears in the ASSEMBLY section, the vehicle manufacturer's specifications must be observed and applied.



If you have any questions, please don't hesitate to contact our Customer Service team or our distributors. You can find our telephone number and a list of our distributors in our online shop:
www.sw-motech.com

The content translation is automated.
© SW-MOTECH GmbH & Co. KG

Errors and omissions excepted
Subject to technical and design changes.

1

1



BC.HTA.00.503.001.02

1/1

2



BC.HTA.00.503.002.02

1/1

2

3



BC.HTA.00.503.003.02

4/4

The content translation is automated.
© SW-MOTECH GmbH & Co. KG

Errors and omissions excepted
Subject to technical and design changes.

1

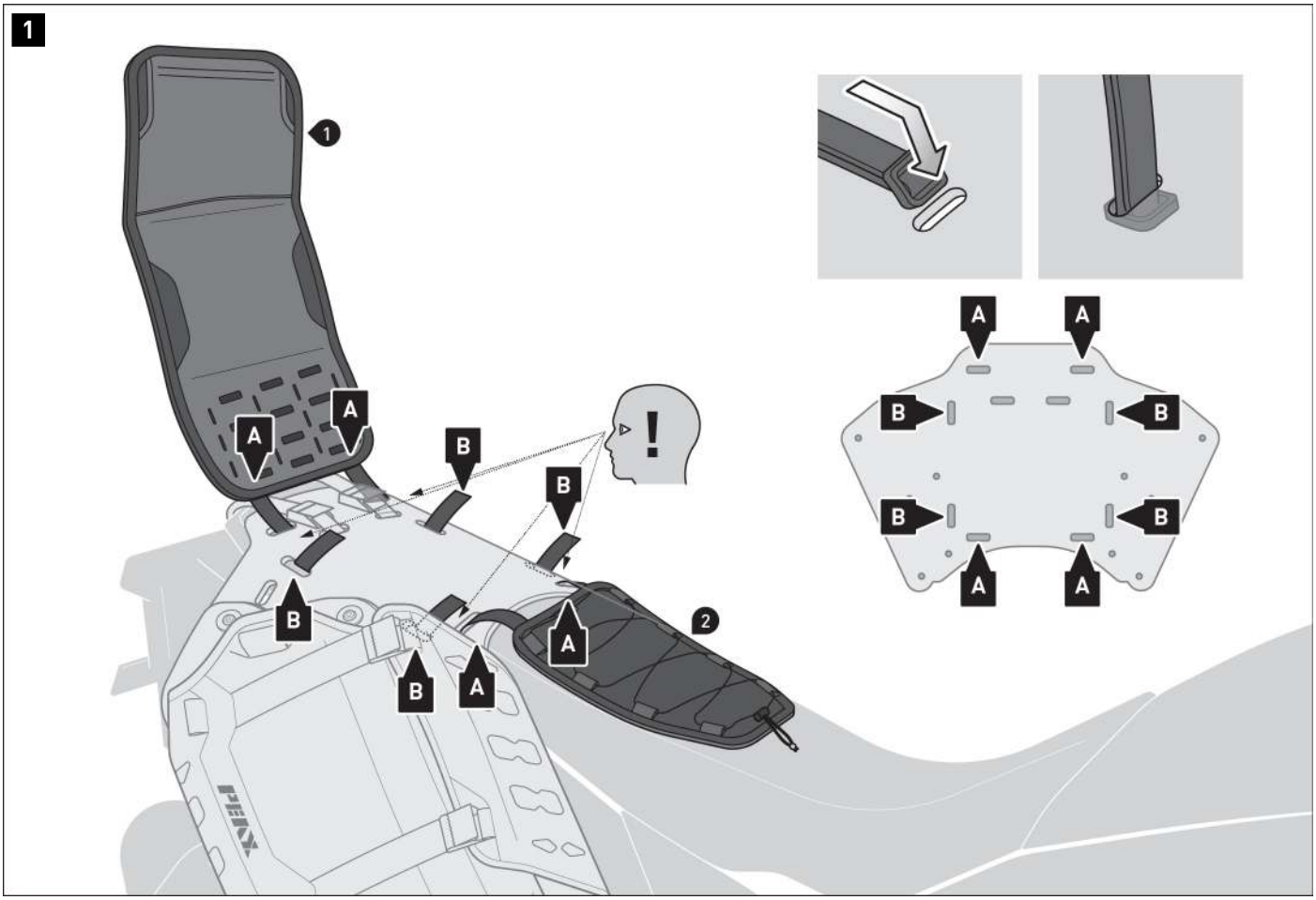

The fastening straps on the top (1) and bottom (2) are attached by inserting them into the recesses [A] on the center plate, as shown in the detailed drawing above.

Alternatively, the Beaver Tail can also be rotated 90 degrees and attached at positions [B].





The content translation is automated.
© SW-MOTECH GmbH & Co. KG

Errors and omissions excepted
Subject to technical and design changes.

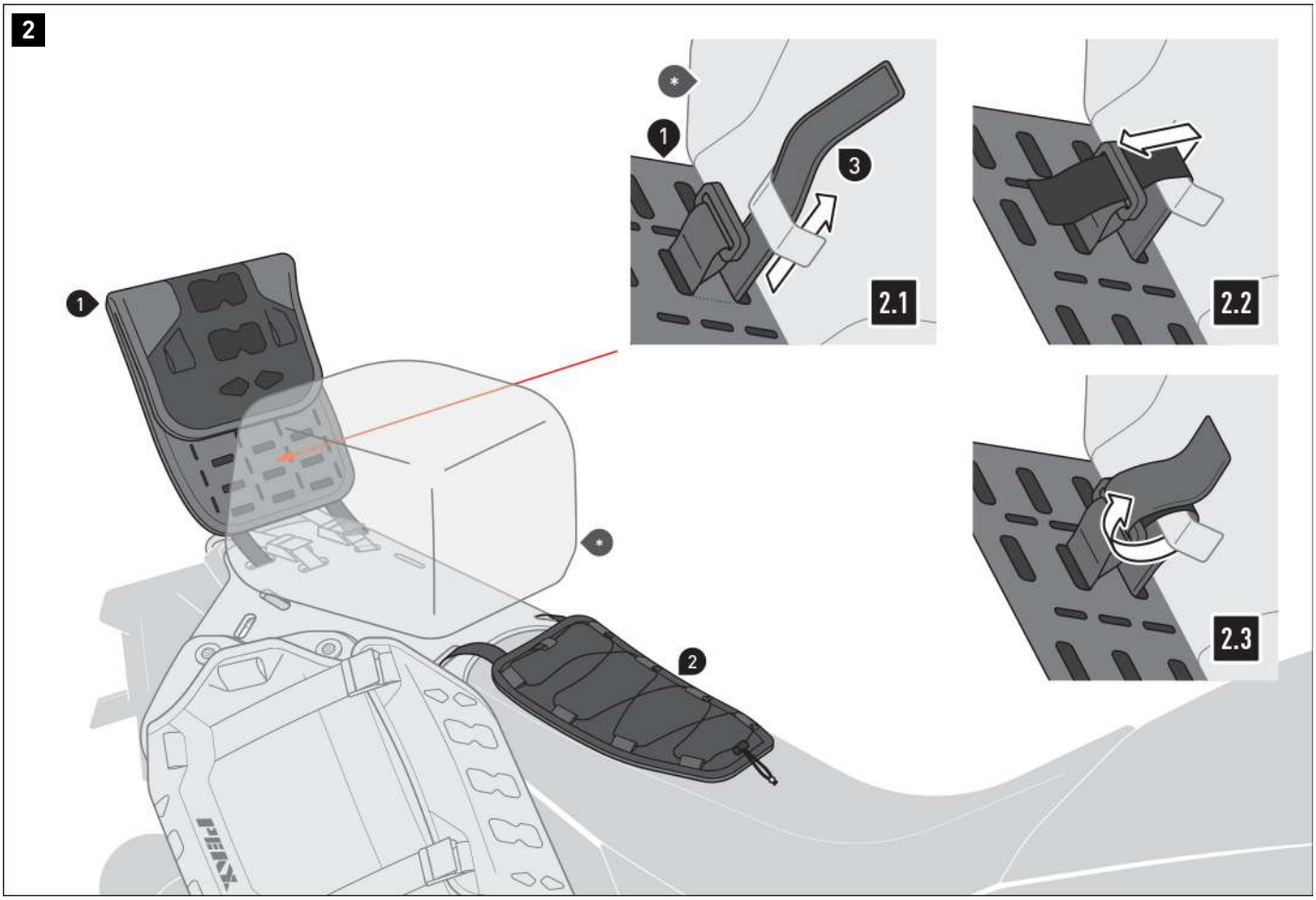

Select the positions of the straps (3) on the MOLLE system for the top (1) according to the attachment options (tabs or handle) on your SW-MOTECH luggage (·).

2.1 - Next, guide the straps (3) through the loops of the MOLLE system on the top (1) according to the positioning and attachment options of your SW-MOTECH luggage (·).
Pay attention to the correct alignment of the Velcro on the straps (3).

2.2 - Feed the straps (3) through the buckles.

2.3 - Fasten the straps (3) using the Velcro.

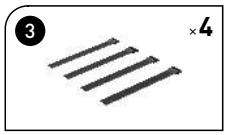

The content translation is automated.
© SW-MOTECH GmbH & Co. KG

Errors and omissions excepted
Subject to technical and design changes.

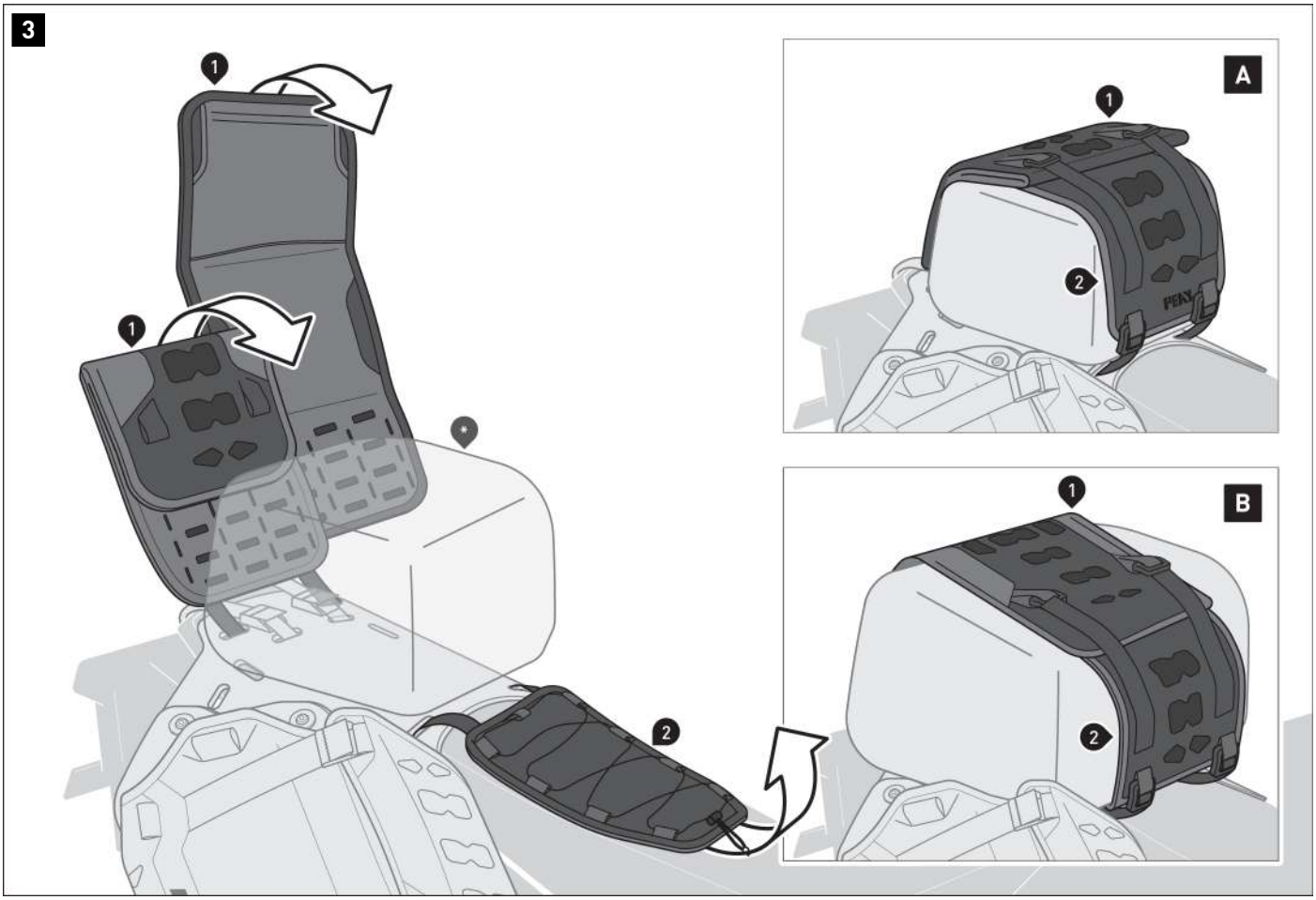

Depending on the dimensions (see sample illustrations [A] and B]), close the top (1) and bottom (2) around your SW-MOTECH luggage (·).

The content translation is automated.
© SW-MOTECH GmbH & Co. KG

Errors and omissions excepted
Subject to technical and design changes.

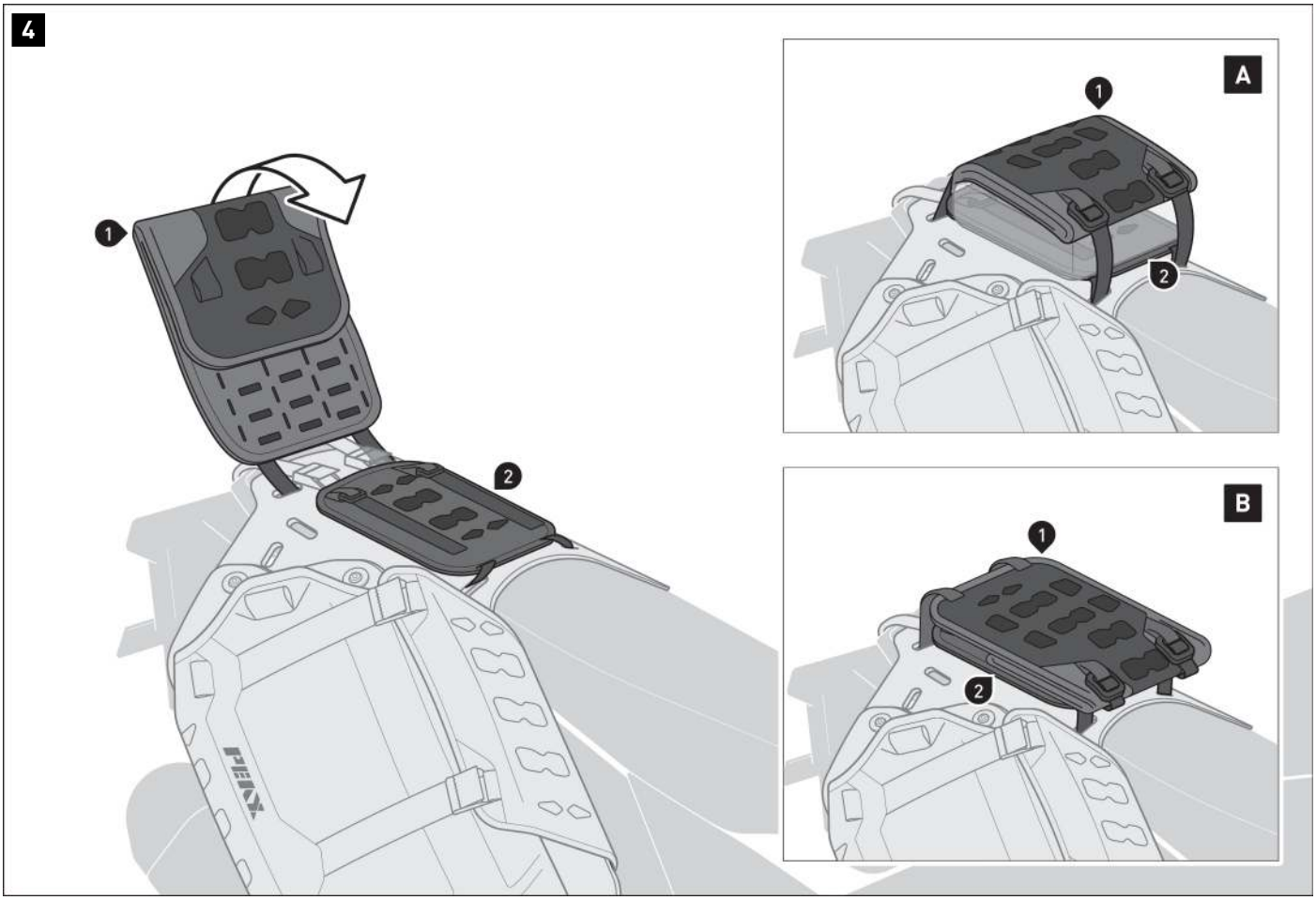

Close the top (1) around your SW-MOTECH luggage (·); in this case, the bottom (2) rests on the center plate (see sample illustration [A]).

The Beaver Tail can also be used without luggage (see sample illustration [B]).

The content translation is automated.
© SW-MOTECH GmbH & Co. KG

Errors and omissions excepted
Subject to technical and design changes.

5

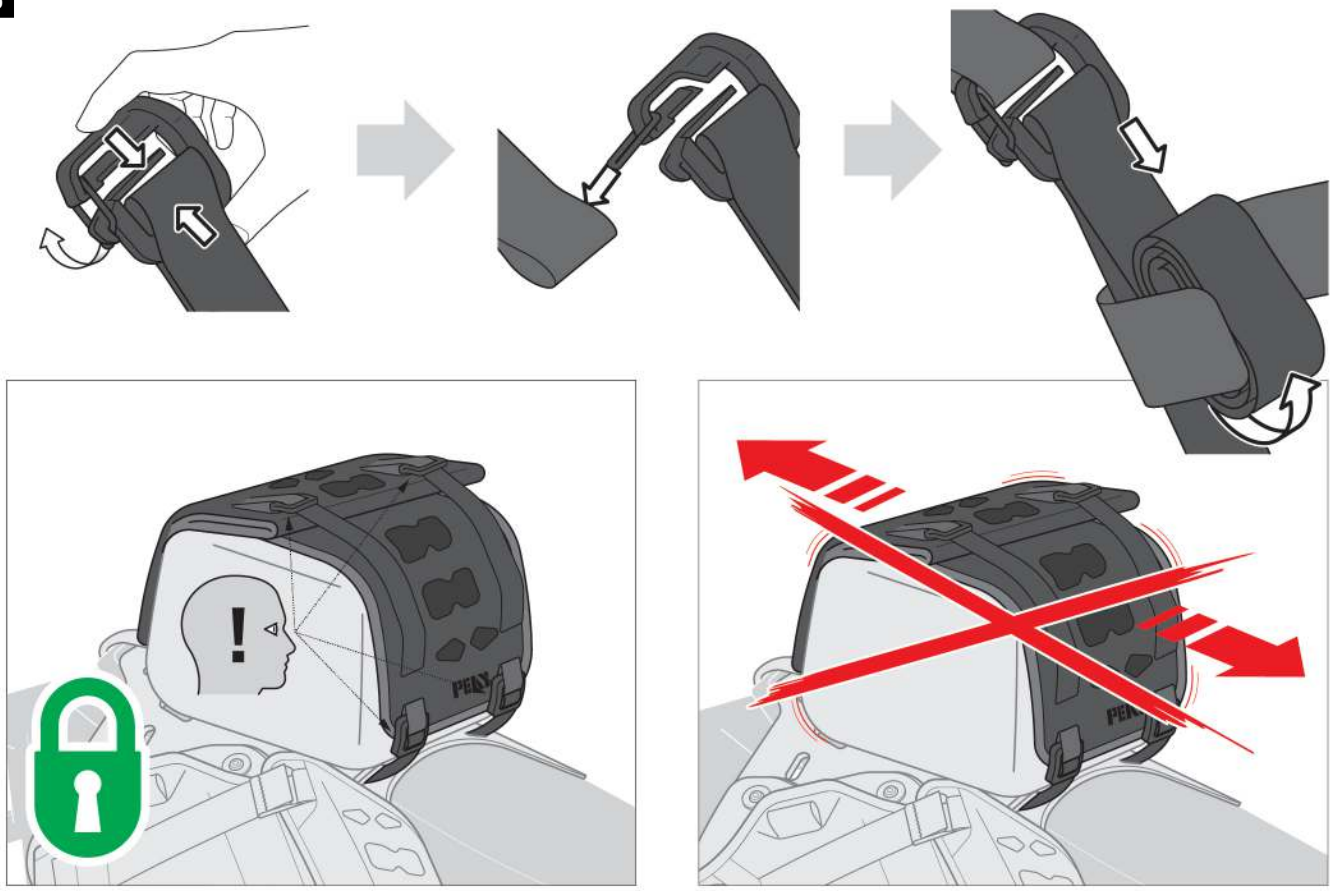

Squeeze the buckles together to open the safety catches.

Now connect all buckles to the loops.

Tighten the straps until your SW-MOTECH luggage (•) is centered and securely positioned.

Carefully roll up any excess length and secure it against fluttering with the Velcro strips.

⚠ WARNING: Always close the safety catch on the buckles! Always securely tighten the straps!

⚠ WARNING: Regularly check that the product is securely in place, as described in the FUNCTIONAL CHECK section on page 1.

The content translation is automated.
© SW-MOTECH GmbH & Co. KG

Errors and omissions excepted
Subject to technical and design changes.

6

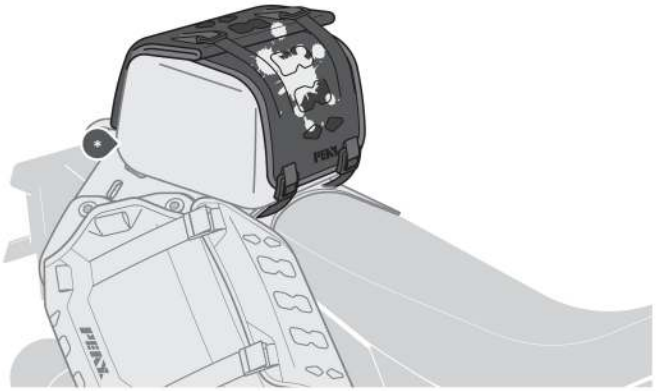

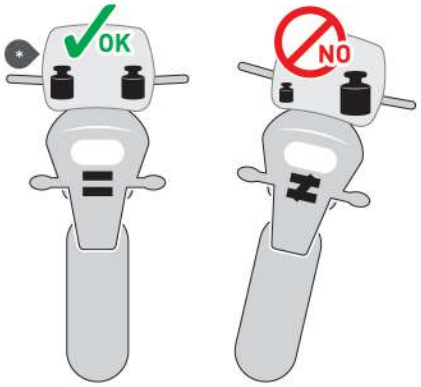



CARE

For cleaning, use **ONLY** a soft textile brush, a cloth or a sponge and warm soapy water! Then rinse with clean water.

DO NOT use harsh cleaning agents, abrasive cleaning utensils or high-pressure cleaners! Be sure to clean the tail bag after winter rides to avoid damage caused by salt.

⚠ ***NOTE:*** *Surface materials may be damaged by prolonged and intensivesolar radiation and environmental influences (e.g. smog, acid rain) Subject to colour changes (fading). SW-MOTECH assumes no liability for this.*

LOADING

⚠ ***NOTE:****Make sure the load is evenly distributed! Ensure that the load is securely in place and won't shift during transport!*

⚠ ***NOTE:*** *Make sure never to stow sharp-edged, pointed or similar objects that could cause personal injury or damage to the vehicle or your SW-MOTECH luggage (·)!*

⚠ ***NOTE:*** *Attach only the designated SW-MOTECH products to the MOLLE system!*

⚠ ***NOTE:*** *Reduce load when driving off-road.*

The content translation is automated.
© SW-MOTECH GmbH & Co. KG

Errors and omissions excepted
Subject to technical and design changes.

PRODUCT-SPECIFIC NOTES

⚠ ***NOTE:*** *Observe the country-specific regulations for the registration/operation of your vehicle and any applicable TÜV regulations. Have any parts requiring registration entered in the vehicle documents by your inspection centre after they have been installed.*

⚠ DANGER: Since this is a universal product, please be sure to check that the product can be properly and correctly attached to and used on your vehicle model before using it for the first time! After mounting, check that all vehicle components are unobstructed and can function properly! Lights such as taillights and turn light indicators must not be impeded in their function! Cables, wires, and hoses should not rub and/or squeeze against anything!

⚠ DANGER: Carry out a comprehensive check to ensure everything functions properly before departure!

⚠ DANGER: Ensure that the product is properly positioned before departure and at every rest stop (every 200 km)!

⚠ DANGER: The driving/braking behavior of the motorcycle changes noticeably after mounting this product!

⚠ DANGER: Lean angle and ground clearance may be restricted by this product!

⚠ DANGER: The maximum vehicle load specified by the vehicle manufacturer remains applicable!

see LOAD	≤ 130km/h (≤ 80mph)

© SW-MOTECH GmbH & Co. KG

Errors and omissions excepted
Subject to technical and design changes.

Item number: **BC.HTA.00.504.15000/B**	Revision: **00** · Date: **10 - 2026**

PEAX Rackless Heat Protection

~ 0.25 h.	**EASY** **DIFFICULT**

ENGLISH · Thank you for choosing an SW-MOTECH product. Further information (e.g., vehicle and model compatibility) can be found in our online store. Depending on the product and market, the relevant approval documents (e.g., type approval) are available for download there, if applicable. Before installation, please check whether use on public roads is permitted in your country or state and whether any permits or registrations are required. The information provided in these mounting instructions regarding the estimated installation time (h: hour) and difficulty level (1: very easy; 2: easy; 3: moderate; 4: challenging; 5: very challenging) are non-binding guidelines and depend on individual skills, prior knowledge, the tools used, and the condition of the vehicle. To avoid personal injury and property damage, read and follow all instructions and warnings in these mounting instructions before installation and use. Keep the instructions for future reference. Additional information and detailed warranty and guarantee regulations can be found in our General Terms and Conditions on our website.
This product is designed for vehicles in original condition (basic configuration). Compatibility with factory options/special upgrades, original accessories from the vehicle manufacturer and/or third-party accessories is not guaranteed; the model designations published in our online store are decisive. These mounting instructions were created to the best of our knowledge and according to the current state of knowledge at the time of publication. We reserve the right to correct any printing errors as well as content errors and make technical or design changes to the product and instructions; the most up-to-date version can be found in our online store. To the extent permitted by law, we are not liable for any damage resulting from the use of incorrect or incomplete information in these mounting instructions. The copyright for these mounting instructions belongs to SW-MOTECH.

WARNING SYMBOLS

The warning symbols used in these mounting instructions (⚠/⚠) indicate life-threatening situations, risks of injury and other hazards. Key words such as **DANGER**, **WARNING**, **CAUTION** or ***NOTE*** appear together with the aforementioned warning symbols and indicate important safety instructions for the installation and use of this product. When combined with warning symbols, these key words have the following meaning:
⚠ **DANGER:** Indicates a dangerous situation that will lead to death or serious injury if unheeded!
⚠ **WARNING:** Indicates a potentially dangerous situation that could result in death or serious injury if unheeded!
⚠ **CAUTION:** Indicates a potentially dangerous situation that could result in minor or moderate injury if unheeded!
⚠ ***NOTE:*** Indicates important information that will not lead to risk of death or injury; failure to heed it may result in property damage.

GENERAL INFORMATION

⚠ WARNING: Installation and maintenance of this product requires advanced technical knowledge, proper tools and safe handling of tools and tightening torque specifications! For safety reasons, SW-MOTECH recommends having all work carried out by a qualified professional in a workshop!
⚠ WARNING: If installing the product yourself, read and understand these mounting instructions completely before installation and use, and follow all instructions! Additionally, observe all relevant vehicle manufacturer specifications during installation and use! If any section of these mounting instructions is unclear or you require clarification, do not begin installation; discontinue any work already started and contact SW-MOTECH or a workshop with qualified professionals!

PREPARATION: Ensure a clean, level and well-lit work surface. Sort all product parts and check them against the parts list for completeness and integrity. Gather the necessary tools.
⚠ CAUTION: Ensure the vehicle is securely parked (on a level, firm surface). Switch off the engine and remove the ignition key. Allow the engine and exhaust to cool completely. When working on the electrical system, disconnect the battery (start with the negative terminal). Use appropriate tools and always wear safety glasses and gloves during installation and maintenance. Have a second person assist you with installation.

INSTALLATION: All disassembled vehicle parts and connections must be reassembled according to the vehicle manufacturer's specifications or, if specified in these mounting instructions, replaced with SW-MOTECH parts.
⚠ WARNING: Only use liquid thread locker if explicitly instructed in these mounting instructions or in the vehicle manufacturer's specifications to prevent threaded connections from loosening on their own! Do not apply liquid thread locker to plastic parts or use it in areas where the vehicle manufacturer prohibits it!
⚠ DANGER: Tightening torques not specified in these mounting instructions must be taken from the vehicle manufacturer's specifications or determined by qualified workshop professionals! Tightening torques incorrectly may lead to broken components and serious injury!

FUNCTIONAL CHECK: After mounting, ensure that no moving parts are blocked and that vehicle functionality is not impaired. Cables, lines, and hoses must never rub against each other, be squeezed or excessively taut. Check this while the steering wheel is at full lock and throughout the entire suspension travel.
⚠ WARNING: Perform a complete functional check before starting your journey. After the first 50 km, and then at regular intervals, check all fasteners for a secure fit and correct torque and retighten if necessary. Mounted accessories may affect handling and stability; conduct a careful test drive first and adjust your driving style accordingly!

STORAGE: When not in use, store the product in a dry, clean and weatherproof location.

DISPOSAL: Dispose of the product and packaging in an environmentally responsible manner in accordance with any applicable regulations at a suitable recycling or collection point. In particular, separate any electrical/electronic components and taken them to a specialized collection point. Be aware of local disposal regulations and follow them. To avoid waste, prioritize repair or reuse and properly separate materials by type.

SW-MOTECH GmbH & Co. KG
Ernteweg 7-10
35282 Rauschenberg
Germany

info@sw-motech.com
www.sw-motech.com

The content translation is automated.
© SW-MOTECH GmbH & Co. KG

Errors and omissions excepted
Subject to technical and design changes.



Take note of the symbols and what they mean in the ASSEMBLY section. If the term OEM appears in the ASSEMBLY section, the vehicle manufacturer's specifications must be observed and applied.



If you have any questions, please don't hesitate to contact our Customer Service team or our distributors. You can find our telephone number and a list of our distributors in our online shop:
www.sw-motech.com

The content translation is automated.
© SW-MOTECH GmbH & Co. KG

Errors and omissions excepted
Subject to technical and design changes.

1

1



BC.HTA.00.504.001.02

1/1

2

2



KB.PA.048.730.02

2/2

The content translation is automated.
© SW-MOTECH GmbH & Co. KG

Errors and omissions excepted
Subject to technical and design changes.

1

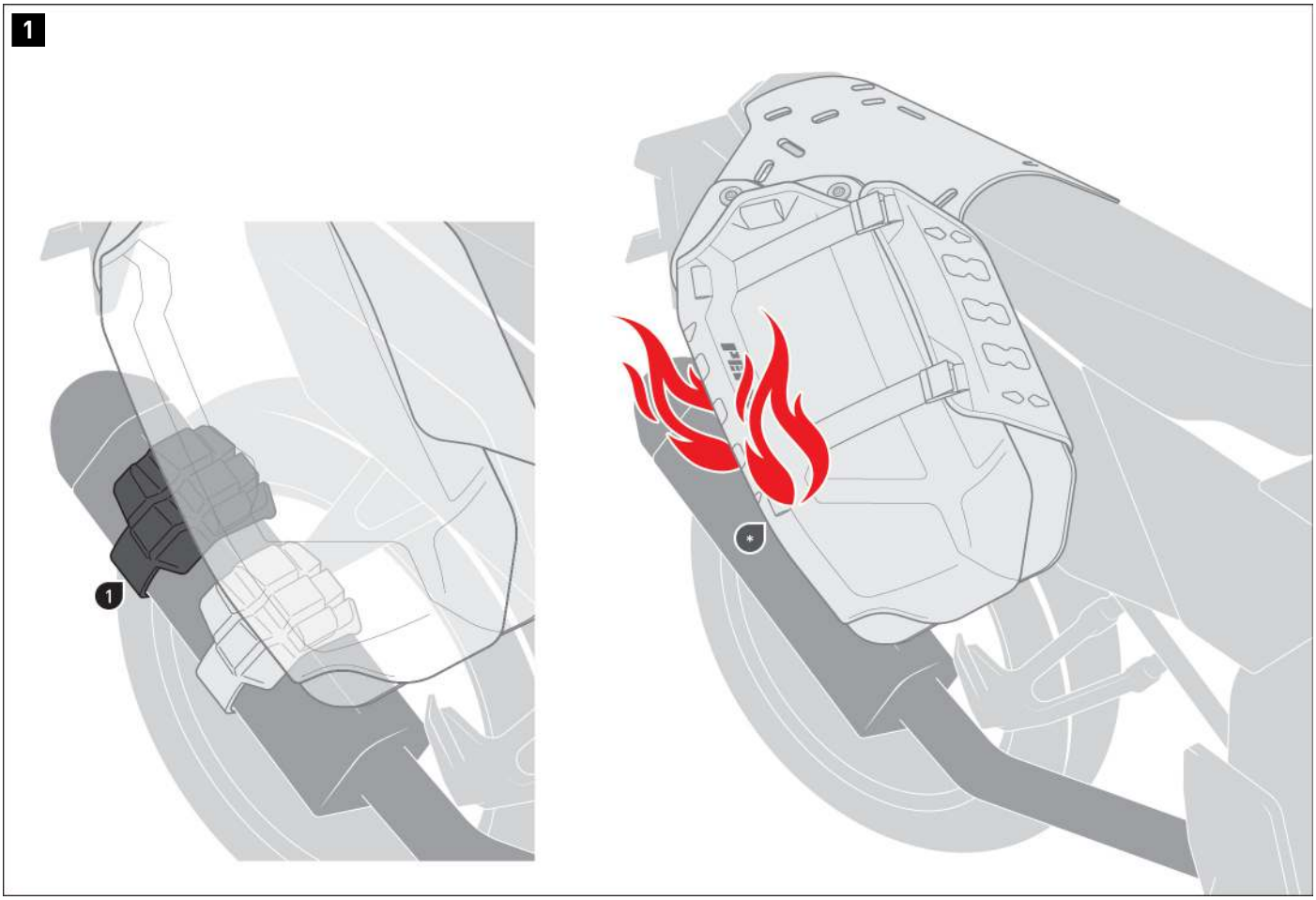

⚠ WARNING: Ensure that no components come into contact with hot and moving vehicle parts!
Also ensure that all components are at least 5 cm away from hot parts and from the hot exhaust flow.
After installation, ensure that this clearance is maintained in every suspension state of the bike.

If the minimum distance cannot be maintained, the heat shield (1) must be installed on the muffler. Depending on the dimensions, a second heat shield may also be necessary.



The content translation is automated.
© SW-MOTECH GmbH & Co. KG

Errors and omissions excepted
Subject to technical and design changes.

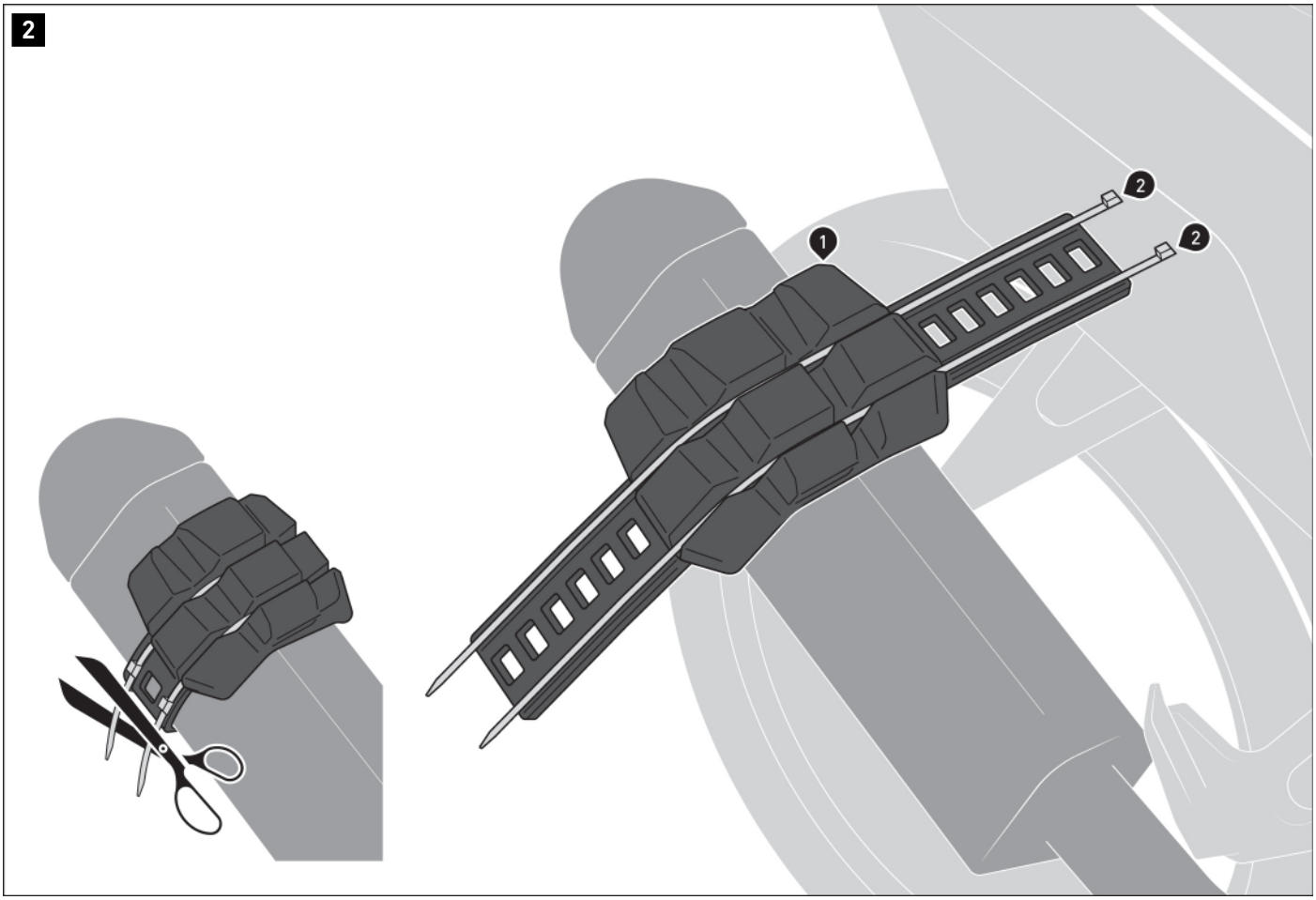

Attach the heat shield (1) to the previously determined contact surface of the holster (·) on the muffler using the cable ties (2).

Remove any excess length of the cable ties (2) after fastening.

⚠ CAUTION: The cable ties (2) must not come into direct contact with the hot surface of the muffler!



The content translation is automated.
© SW-MOTECH GmbH & Co. KG

Errors and omissions excepted
Subject to technical and design changes.

3

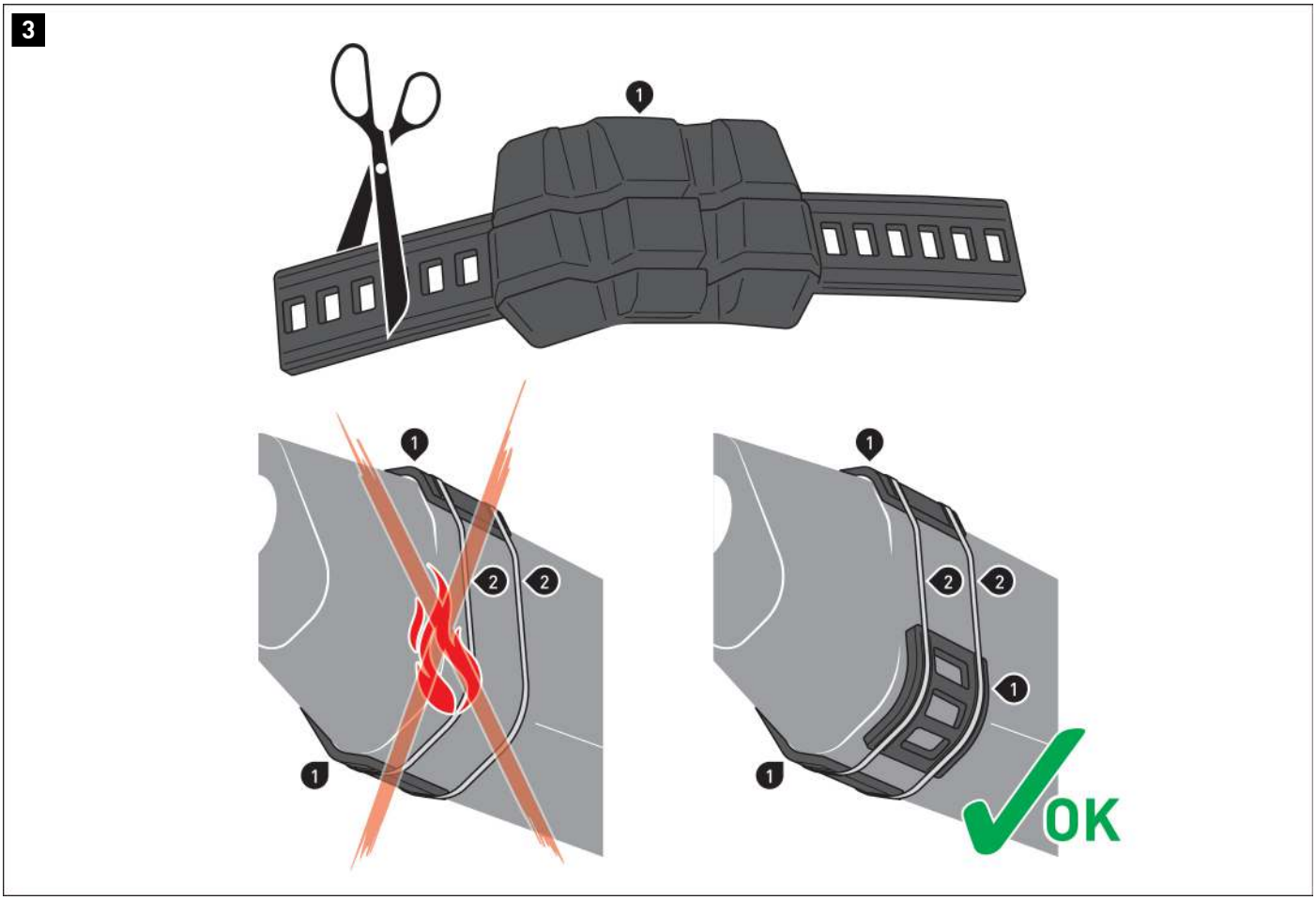

⚠ WARNING: In exceptional cases, the shape of the muffler may make it necessary to remove part of the cable tie guide from the heat shield (1) and relocate it to a suitable location on the muffler.

The content translation is automated.
© SW-MOTECH GmbH & Co. KG

Errors and omissions excepted
Subject to technical and design changes.

PRODUCT-SPECIFIC NOTES

⚠ ***NOTE*** :*Observe the country-specific regulations for the registration/operation of your vehicle and any applicable TÜV regulations. Have any parts requiring registration entered into your vehicle documents by your inspection centre after they have been installed.*

The content translation is automated.
© SW-MOTECH GmbH & Co. KG

Errors and omissions excepted
Subject to technical and design changes.

Item number: **BC.HTA.00.505.15000**	Revision: **00** · Date: **10 - 2026**

PEAX Rackless Side Bag 20L

~ 0.5 h.	**EASY** **DIFFICULT**

ENGLISH · Thank you for choosing an SW-MOTECH product. Further information (e.g., vehicle and model compatibility) can be found in our online store. Depending on the product and market, the relevant approval documents (e.g., type approval) are available for download there, if applicable. Before installation, please check whether use on public roads is permitted in your country or state and whether any permits or registrations are required. The information provided in these mounting instructions regarding the estimated installation time (h: hour) and difficulty level (1: very easy; 2: easy; 3: moderate; 4: challenging; 5: very challenging) are non-binding guidelines and depend on individual skills, prior knowledge, the tools used, and the condition of the vehicle. To avoid personal injury and property damage, read and follow all instructions and warnings in these mounting instructions before installation and use. Keep the instructions for future reference. Additional information and detailed warranty and guarantee regulations can be found in our General Terms and Conditions on our website.
This product is designed for vehicles in original condition (basic configuration). Compatibility with factory options/special upgrades, original accessories from the vehicle manufacturer and/or third-party accessories is not guaranteed; the model designations published in our online store are decisive. These mounting instructions were created to the best of our knowledge and according to the current state of knowledge at the time of publication. We reserve the right to correct any printing errors as well as content errors and make technical or design changes to the product and instructions; the most up-to-date version can be found in our online store. To the extent permitted by law, we are not liable for any damage resulting from the use of incorrect or incomplete information in these mounting instructions. The copyright for these mounting instructions belongs to SW-MOTECH.

WARNING SYMBOLS

The warning symbols used in these mounting instructions (⚠/⚠) indicate life-threatening situations, risks of injury and other hazards. Key words such as **DANGER**, **WARNING**, **CAUTION** or ***NOTE*** appear together with the aforementioned warning symbols and indicate important safety instructions for the installation and use of this product. When combined with warning symbols, these key words have the following meaning:
⚠ **DANGER:** Indicates a dangerous situation that will lead to death or serious injury if unheeded!
⚠ **WARNING:** Indicates a potentially dangerous situation that could result in death or serious injury if unheeded!
⚠ **CAUTION:** Indicates a potentially dangerous situation that could result in minor or moderate injury if unheeded!
⚠ ***NOTE:*** Indicates important information that will not lead to risk of death or injury; failure to heed it may result in property damage.

GENERAL INFORMATION

⚠ WARNING: Installation and maintenance of this product requires advanced technical knowledge, proper tools and safe handling of tools and tightening torque specifications! For safety reasons, SW-MOTECH recommends having all work carried out by a qualified professional in a workshop!
⚠ WARNING: If installing the product yourself, read and understand these mounting instructions completely before installation and use, and follow all instructions! Additionally, observe all relevant vehicle manufacturer specifications during installation and use! If any section of these mounting instructions is unclear or you require clarification, do not begin installation; discontinue any work already started and contact SW-MOTECH or a workshop with qualified professionals!

PREPARATION: Ensure a clean, level and well-lit work surface. Sort all product parts and check them against the parts list for completeness and integrity. Gather the necessary tools.
⚠ CAUTION: Ensure the vehicle is securely parked (on a level, firm surface). Switch off the engine and remove the ignition key. Allow the engine and exhaust to cool completely. When working on the electrical system, disconnect the battery (start with the negative terminal). Use appropriate tools and always wear safety glasses and gloves during installation and maintenance. Have a second person assist you with installation.

INSTALLATION: All disassembled vehicle parts and connections must be reassembled according to the vehicle manufacturer's specifications or, if specified in these mounting instructions, replaced with SW-MOTECH parts.
⚠ WARNING: Only use liquid thread locker if explicitly instructed in these mounting instructions or in the vehicle manufacturer's specifications to prevent threaded connections from loosening on their own! Do not apply liquid thread locker to plastic parts or use it in areas where the vehicle manufacturer prohibits it!
⚠ DANGER: Tightening torques not specified in these mounting instructions must be taken from the vehicle manufacturer's specifications or determined by qualified workshop professionals! Tightening torques incorrectly may lead to broken components and serious injury!

FUNCTIONAL CHECK: After mounting, ensure that no moving parts are blocked and that vehicle functionality is not impaired. Cables, lines, and hoses must never rub against each other, be squeezed or excessively taut. Check this while the steering wheel is at full lock and throughout the entire suspension travel.
⚠ WARNING: Perform a complete functional check before starting your journey. After the first 50 km, and then at regular intervals, check all fasteners for a secure fit and correct torque and retighten if necessary. Mounted accessories may affect handling and stability; conduct a careful test drive first and adjust your driving style accordingly!

STORAGE: When not in use, store the product in a dry, clean and weatherproof location.

DISPOSAL: Dispose of the product and packaging in an environmentally responsible manner in accordance with any applicable regulations at a suitable recycling or collection point. In particular, separate any electrical/electronic components and taken them to a specialized collection point. Be aware of local disposal regulations and follow them. To avoid waste, prioritize repair or reuse and properly separate materials by type.

SW-MOTECH®

SW-MOTECH GmbH & Co. KG
Ernteweg 7-10
35282 Rauschenberg
Germany

info@sw-motech.com
www.sw-motech.com

The content translation is automated.
© SW-MOTECH GmbH & Co. KG

Errors and omissions excepted
Subject to technical and design changes.



Take note of the symbols and what they mean in the ASSEMBLY section. If the term OEM appears in the ASSEMBLY section, the vehicle manufacturer's specifications must be observed and applied.



If you have any questions, please don't hesitate to contact our Customer Service team or our distributors. You can find our telephone number and a list of our distributors in our online shop:
www.sw-motech.com

The content translation is automated.
© SW-MOTECH GmbH & Co. KG

Errors and omissions excepted
Subject to technical and design changes.

1

1



BC.HTA.00.505.15000

2/2

The content translation is automated.
© SW-MOTECH GmbH & Co. KG

Errors and omissions excepted
Subject to technical and design changes.

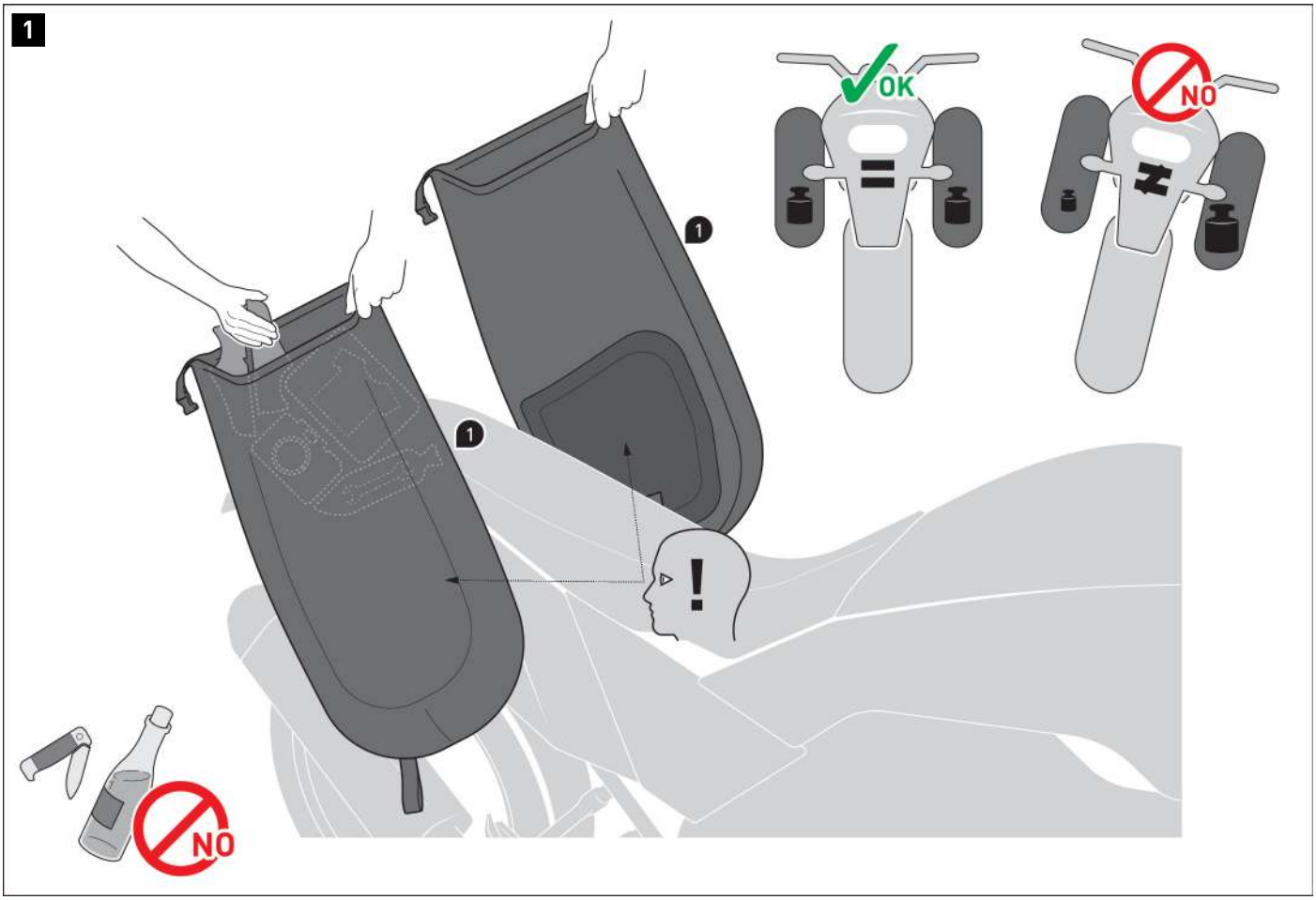

LOADING



⚠ ***NOTE:*** *Make sure never to stow sharp-edged, pointed or similar objects that could cause injury to people or damage to the vehicle or side bags!*

⚠ ***NOTE:*** *Ensure the load is evenly distributed and secured against slipping while riding.*

⚠ ***NOTE:*** *Reduce load when driving off-road.*

Make sure that the reinforced attachments with the pull loops are stowed on the inside (towards the vehicle).

The content translation is automated.
© SW-MOTECH GmbH & Co. KG

Errors and omissions excepted
Subject to technical and design changes.

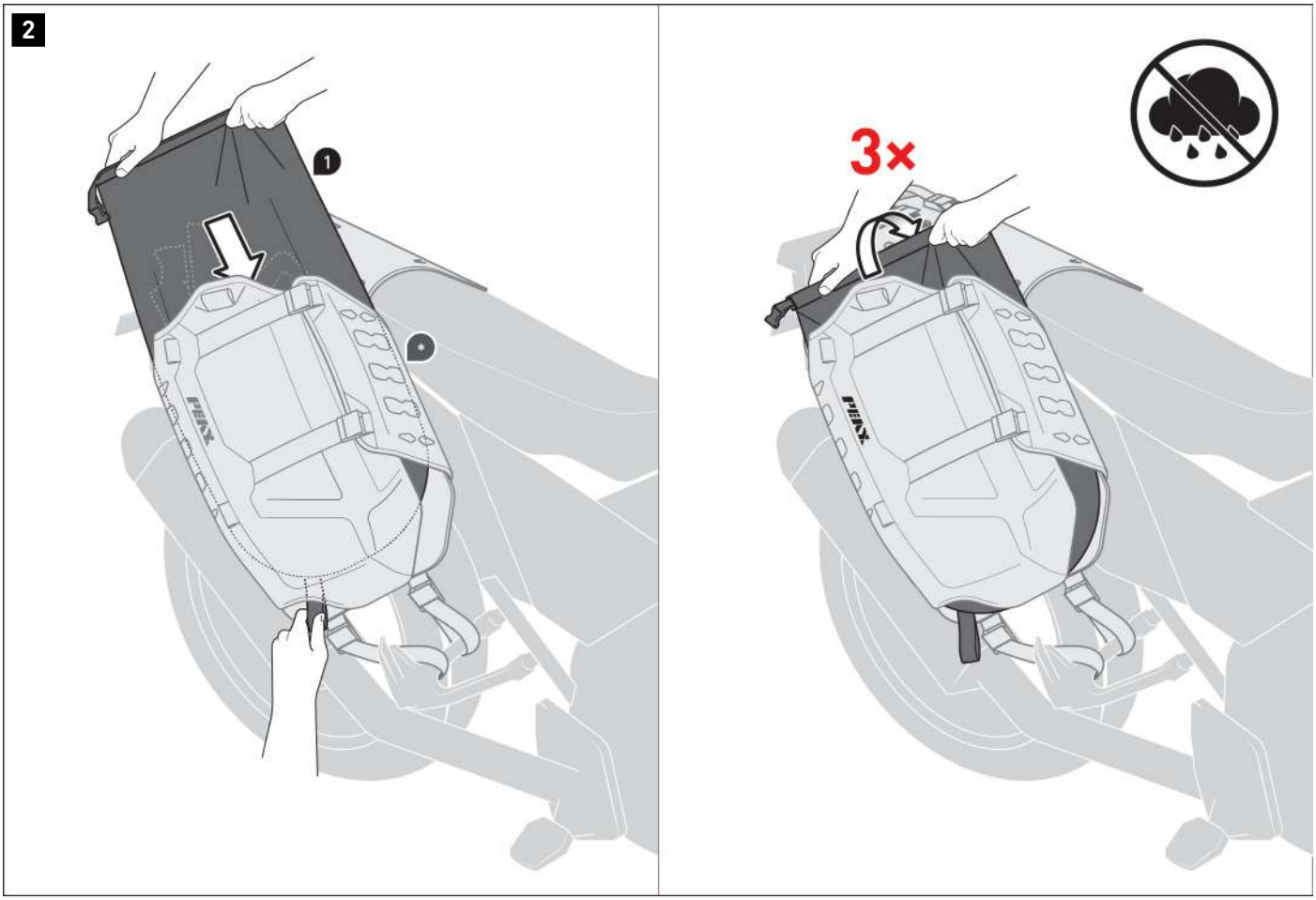

Insert the side bags (1) into the holster (•) and pull on the pull loop at the bottom so that the side bag (1) is completely in the holster (•).

Wrap the opening of the side bags (1) at least three times to protect your luggage from moisture.

The content translation is automated.
© SW-MOTECH GmbH & Co. KG

Errors and omissions excepted
Subject to technical and design changes.

3

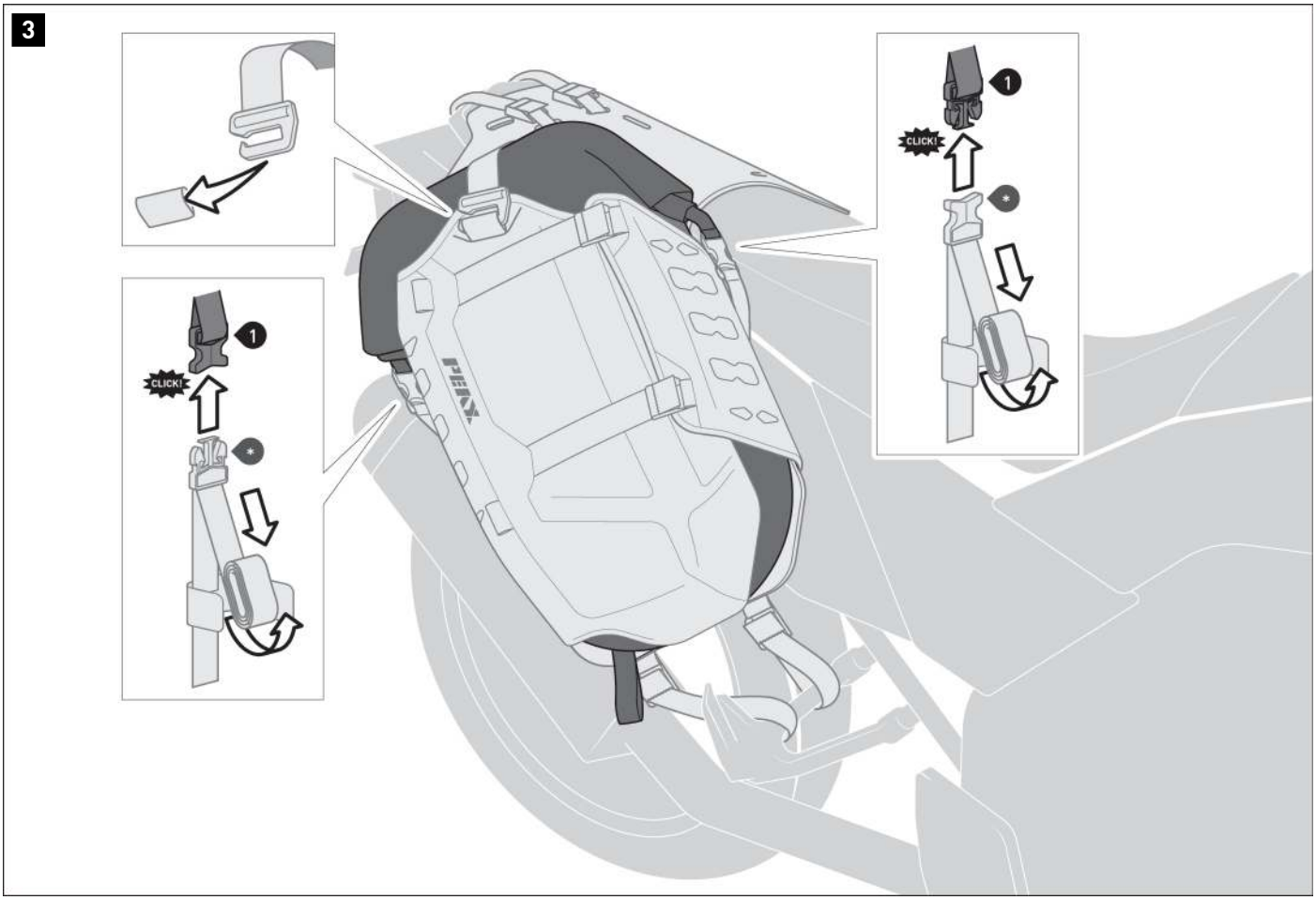

Attach the snap fasteners of the side bag (1) to the counterparts on the holster (•).
Secure the excess length of the fastening straps (•) with the Velcro strips.
Use the hook on the holster to secure the side bag (1) at the top.

The content translation is automated.
© SW-MOTECH GmbH & Co. KG

Errors and omissions excepted
Subject to technical and design changes.

4

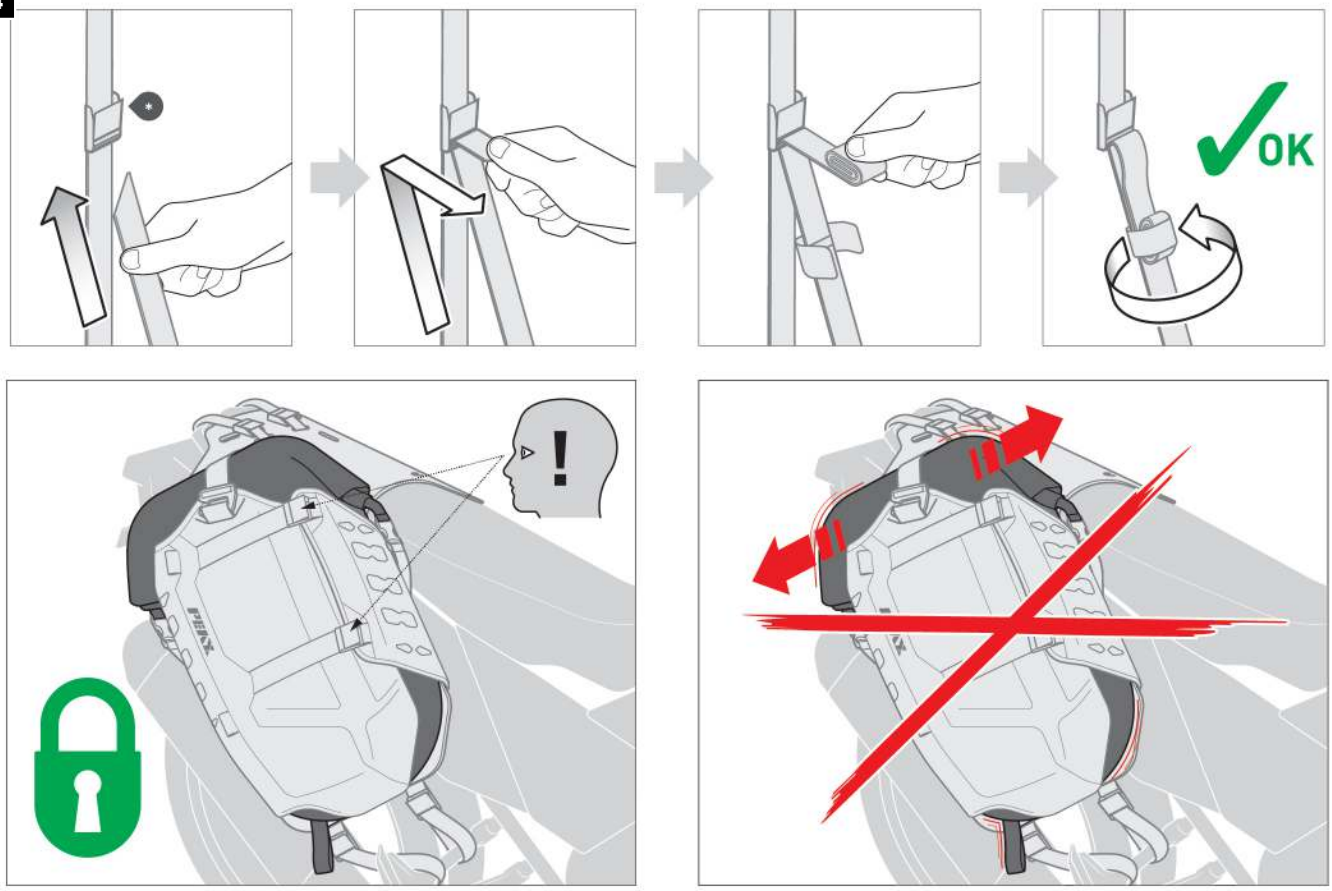

Tighten the fastening straps (•) until the side bags (1) are firmly attached to the holster.
Secure the excess length of the fastening straps (•) with the Velcro strips.

⚠ WARNING: Regularly check that the product is securely in place, as described in the FUNCTIONAL CHECK section on page 1.

The content translation is automated.
© SW-MOTECH GmbH & Co. KG

Errors and omissions excepted
Subject to technical and design changes.

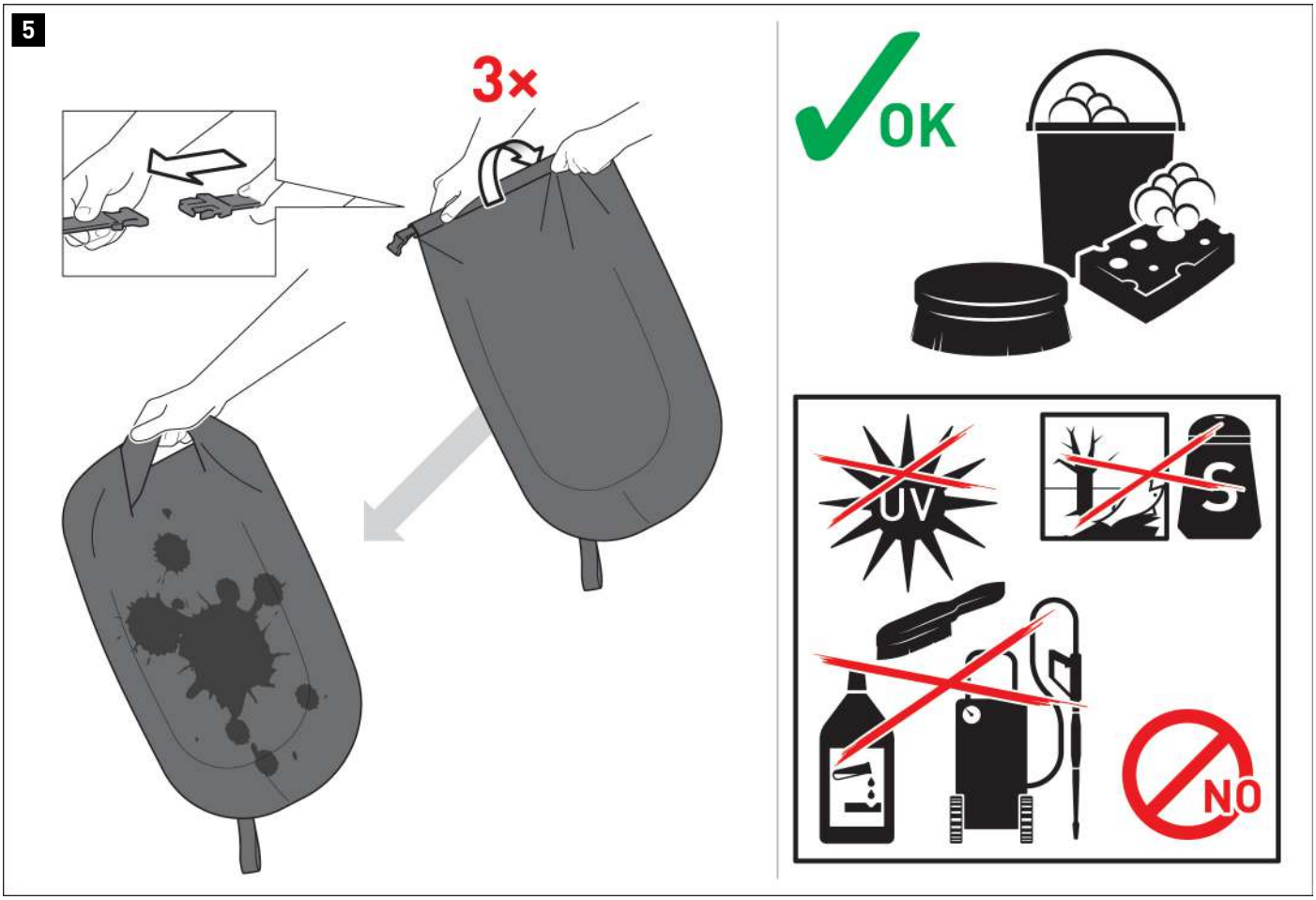

Connect the snap fasteners to use them as a carrying handle.

CARE

For cleaning, use **ONLY** a soft textile brush, a cloth or a sponge and warm soapy water! Then rinse with clean water.

DO NOT use harsh cleaning agents, abrasive cleaning utensils or high-pressure cleaners! Be sure to clean the tail bag after winter rides to avoid damage caused by salt.

⚠ ***NOTE:*** *Surface materials may be damaged by prolonged and intensivesolar radiation and environmental influences (e.g. smog, acid rain) Subject to colour changes (fading). SW-MOTECH assumes no liability for this.*

The content translation is automated.
© SW-MOTECH GmbH & Co. KG

Errors and omissions excepted
Subject to technical and design changes.

PRODUCT-SPECIFIC NOTES

⚠ ***NOTE:*** *Observe the country-specific regulations for the registration/operation of your vehicle and any applicable TÜV regulations. Have any parts requiring registration entered in the vehicle documents by your inspection centre after they have been installed.*

⚠ DANGER: Since this is a universal product, please be sure to check that the product can be properly and correctly attached to and used on your vehicle model before using it for the first time! After mounting, check that all vehicle components are unobstructed and can function properly! Lights such as taillights and turn light indicators must not be impeded in their function! Cables, wires, and hoses should not rub and/or squeeze against anything!

⚠ DANGER: Carry out a comprehensive check to ensure everything functions properly before departure!

⚠ DANGER: Ensure that the product is properly positioned before departure and at every rest stop (every 200 km)!

⚠ DANGER: The driving/braking behavior of the motorcycle changes noticeably after mounting this product!

⚠ DANGER: Lean angle and ground clearance may be restricted by this product!

⚠ DANGER: The maximum vehicle load specified by the vehicle manufacturer remains applicable!

see LOAD	≤ 130km/h (≤ 80mph)

The content translation is automated.
© SW-MOTECH GmbH & Co. KG

Errors and omissions excepted
Subject to technical and design changes.

Item number: **BC.HTA.00.505.15100**	Revision: **00** · Date: **10 - 2026**

PEAX Rackless Top Bag 10L

~ 1 h.	**EASY** **DIFFICULT**

ENGLISH · Thank you for choosing an SW-MOTECH product. Further information (e.g., vehicle and model compatibility) can be found in our online store. Depending on the product and market, the relevant approval documents (e.g., type approval) are available for download there, if applicable. Before installation, please check whether use on public roads is permitted in your country or state and whether any permits or registrations are required. The information provided in these mounting instructions regarding the estimated installation time (h: hour) and difficulty level (1: very easy; 2: easy; 3: moderate; 4: challenging; 5: very challenging) are non-binding guidelines and depend on individual skills, prior knowledge, the tools used, and the condition of the vehicle. To avoid personal injury and property damage, read and follow all instructions and warnings in these mounting instructions before installation and use. Keep the instructions for future reference. Additional information and detailed warranty and guarantee regulations can be found in our General Terms and Conditions on our website.
This product is designed for vehicles in original condition (basic configuration). Compatibility with factory options/special upgrades, original accessories from the vehicle manufacturer and/or third-party accessories is not guaranteed; the model designations published in our online store are decisive. These mounting instructions were created to the best of our knowledge and according to the current state of knowledge at the time of publication. We reserve the right to correct any printing errors as well as content errors and make technical or design changes to the product and instructions; the most up-to-date version can be found in our online store. To the extent permitted by law, we are not liable for any damage resulting from the use of incorrect or incomplete information in these mounting instructions. The copyright for these mounting instructions belongs to SW-MOTECH.

WARNING SYMBOLS

The warning symbols used in these mounting instructions (⚠/⚠) indicate life-threatening situations, risks of injury and other hazards. Key words such as **DANGER**, **WARNING**, **CAUTION** or ***NOTE*** appear together with the aforementioned warning symbols and indicate important safety instructions for the installation and use of this product. When combined with warning symbols, these key words have the following meaning:
⚠ **DANGER:** Indicates a dangerous situation that will lead to death or serious injury if unheeded!
⚠ **WARNING:** Indicates a potentially dangerous situation that could result in death or serious injury if unheeded!
⚠ **CAUTION:** Indicates a potentially dangerous situation that could result in minor or moderate injury if unheeded!
⚠ ***NOTE:*** Indicates important information that will not lead to risk of death or injury; failure to heed it may result in property damage.

GENERAL INFORMATION

⚠ WARNING: Installation and maintenance of this product requires advanced technical knowledge, proper tools and safe handling of tools and tightening torque specifications! For safety reasons, SW-MOTECH recommends having all work carried out by a qualified professional in a workshop!
⚠ WARNING: If installing the product yourself, read and understand these mounting instructions completely before installation and use, and follow all instructions! Additionally, observe all relevant vehicle manufacturer specifications during installation and use! If any section of these mounting instructions is unclear or you require clarification, do not begin installation; discontinue any work already started and contact SW-MOTECH or a workshop with qualified professionals!

PREPARATION: Ensure a clean, level and well-lit work surface. Sort all product parts and check them against the parts list for completeness and integrity. Gather the necessary tools.
⚠ CAUTION: Ensure the vehicle is securely parked (on a level, firm surface). Switch off the engine and remove the ignition key. Allow the engine and exhaust to cool completely. When working on the electrical system, disconnect the battery (start with the negative terminal). Use appropriate tools and always wear safety glasses and gloves during installation and maintenance. Have a second person assist you with installation.

INSTALLATION: All disassembled vehicle parts and connections must be reassembled according to the vehicle manufacturer's specifications or, if specified in these mounting instructions, replaced with SW-MOTECH parts.
⚠ WARNING: Only use liquid thread locker if explicitly instructed in these mounting instructions or in the vehicle manufacturer's specifications to prevent threaded connections from loosening on their own! Do not apply liquid thread locker to plastic parts or use it in areas where the vehicle manufacturer prohibits it!
⚠ DANGER: Tightening torques not specified in these mounting instructions must be taken from the vehicle manufacturer's specifications or determined by qualified workshop professionals! Tightening torques incorrectly may lead to broken components and serious injury!

FUNCTIONAL CHECK: After mounting, ensure that no moving parts are blocked and that vehicle functionality is not impaired. Cables, lines, and hoses must never rub against each other, be squeezed or excessively taut. Check this while the steering wheel is at full lock and throughout the entire suspension travel.
⚠ WARNING: Perform a complete functional check before starting your journey. After the first 50 km, and then at regular intervals, check all fasteners for a secure fit and correct torque and retighten if necessary. Mounted accessories may affect handling and stability; conduct a careful test drive first and adjust your driving style accordingly!

STORAGE: When not in use, store the product in a dry, clean and weatherproof location.

DISPOSAL: Dispose of the product and packaging in an environmentally responsible manner in accordance with any applicable regulations at a suitable recycling or collection point. In particular, separate any electrical/electronic components and taken them to a specialized collection point. Be aware of local disposal regulations and follow them. To avoid waste, prioritize repair or reuse and properly separate materials by type.

SW-MOTECH®

SW-MOTECH GmbH & Co. KG
Ernteweg 7-10
35282 Rauschenberg
Germany

info@sw-motech.com
www.sw-motech.com

The content translation is automated.
© SW-MOTECH GmbH & Co. KG

Errors and omissions excepted
Subject to technical and design changes.



Take note of the symbols and what they mean in the ASSEMBLY section. If the term OEM appears in the ASSEMBLY section, the vehicle manufacturer's specifications must be observed and applied.



If you have any questions, please don't hesitate to contact our Customer Service team or our distributors. You can find our telephone number and a list of our distributors in our online shop:
www.sw-motech.com

The content translation is automated.
© SW-MOTECH GmbH & Co. KG

Errors and omissions excepted
Subject to technical and design changes.

1

1



BC.HTA.00.505.15100

1/1

The content translation is automated.
© SW-MOTECH GmbH & Co. KG

Errors and omissions excepted
Subject to technical and design changes.

1

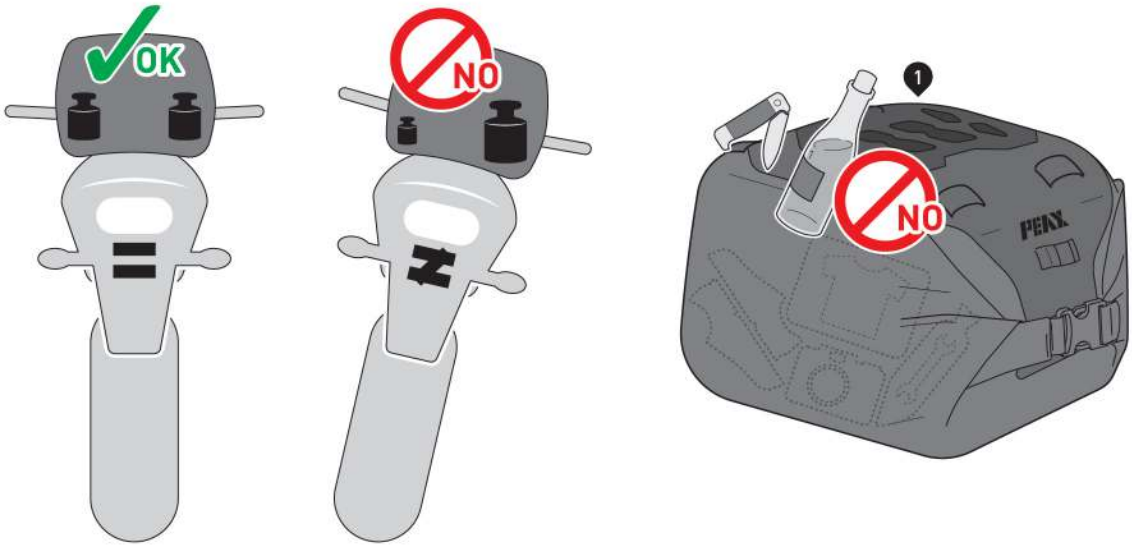

LOADING

⚠ ***NOTE:*** *Make sure the load is evenly distributed! Ensure that the load is securely in place and won't shift during transport!*

⚠ ***NOTE:*** *Make sure never to stow sharp-edged, pointed or similar objects that could cause personal injury or damage to the vehicle or top bag (1)!*

⚠ ***NOTE:*** *Attach only the designated SW-MOTECH products to the MOLLE system!*

⚠ ***NOTE:*** *Reduce load when driving off-road.*



The content translation is automated.
© SW-MOTECH GmbH & Co. KG

Errors and omissions excepted
Subject to technical and design changes.

2

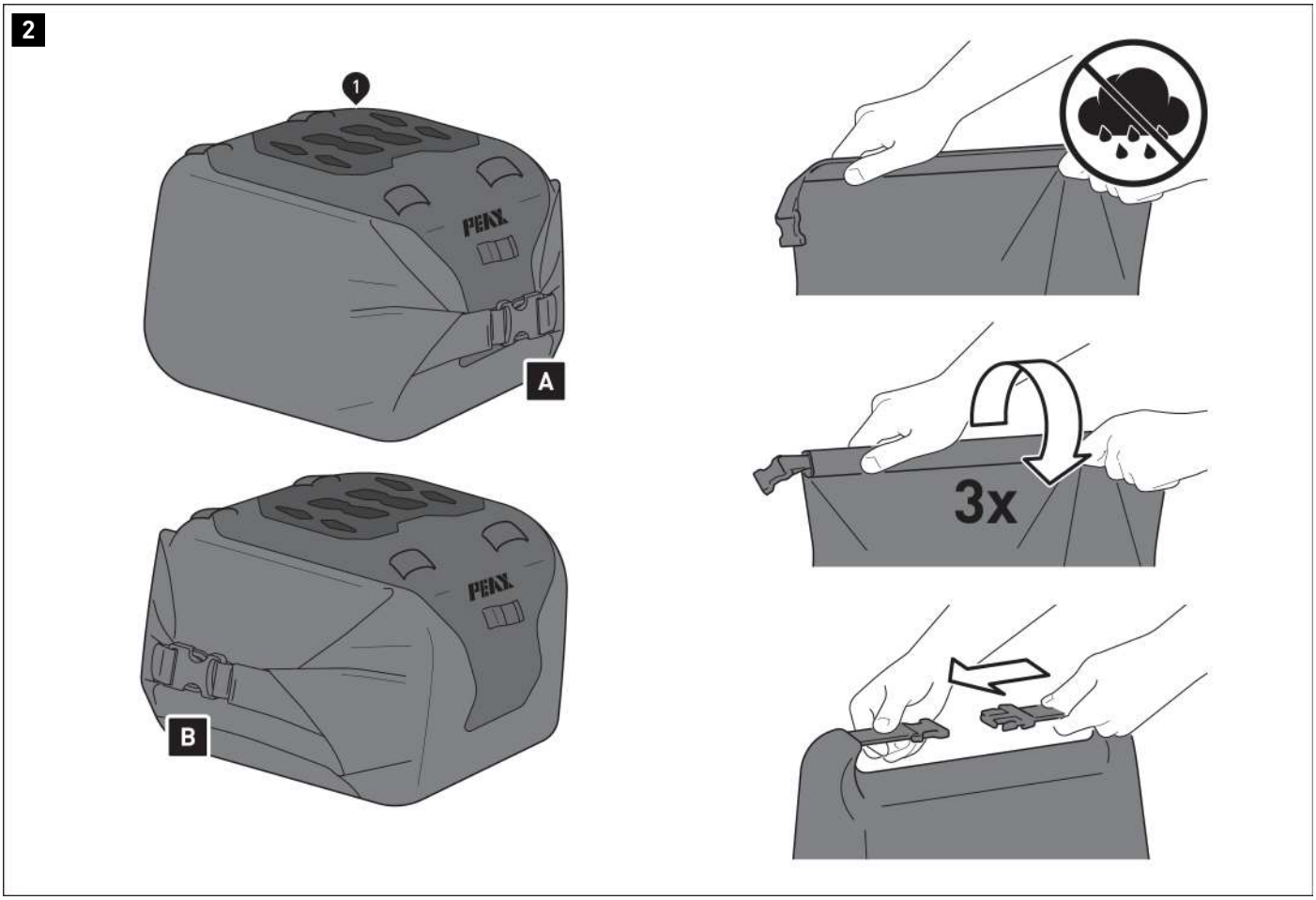

Closing the top bag (1)

Close the top bag (1) according to variant [A] or [B].

Close the top bag (1) closure.

Roll up the closure three times.

Next, connect the buckles of the closure together.

The content translation is automated.
© SW-MOTECH GmbH & Co. KG

Errors and omissions excepted
Subject to technical and design changes.

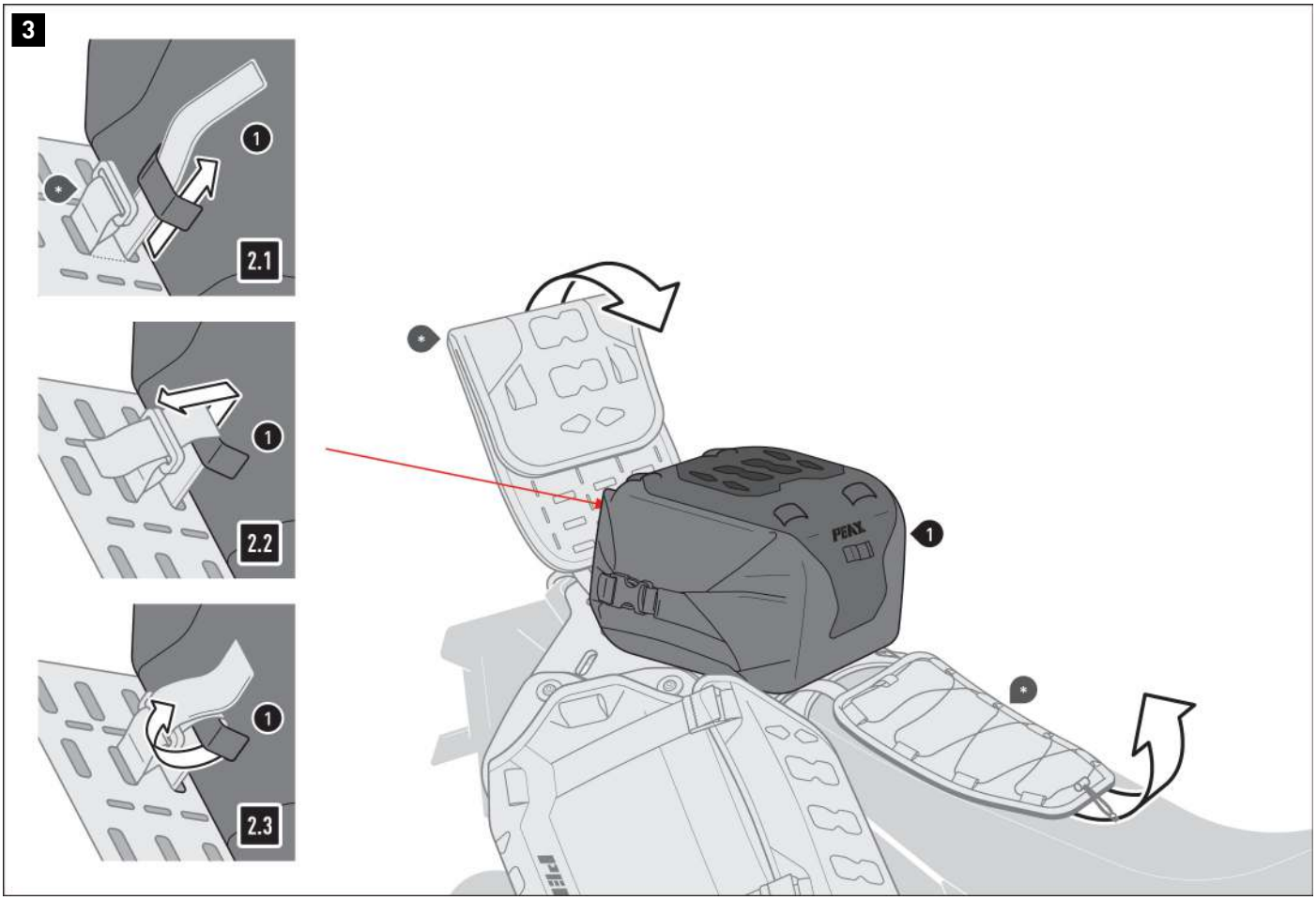

Attaching to the Beaver Tail

Select a position for the strap on the MOLLE system on top (•), i.e. the side facing the plate, so that it aligns with the attchment position on the top bag (1).

2.1 - Feed the straps (•) through the loops of the MOLLE system on the top (•) and the attachment points on the top bag (1).
Make sure the Velcro fastener is aligned correctly.

2.2 - Feed the straps (•) through the buckle.

2.3 - Fasten the straps (•) using the Velcro.

Fold the top (•) and the bottom (•) down around the top bag (1).

The content translation is automated.
© SW-MOTECH GmbH & Co. KG

Errors and omissions excepted
Subject to technical and design changes.

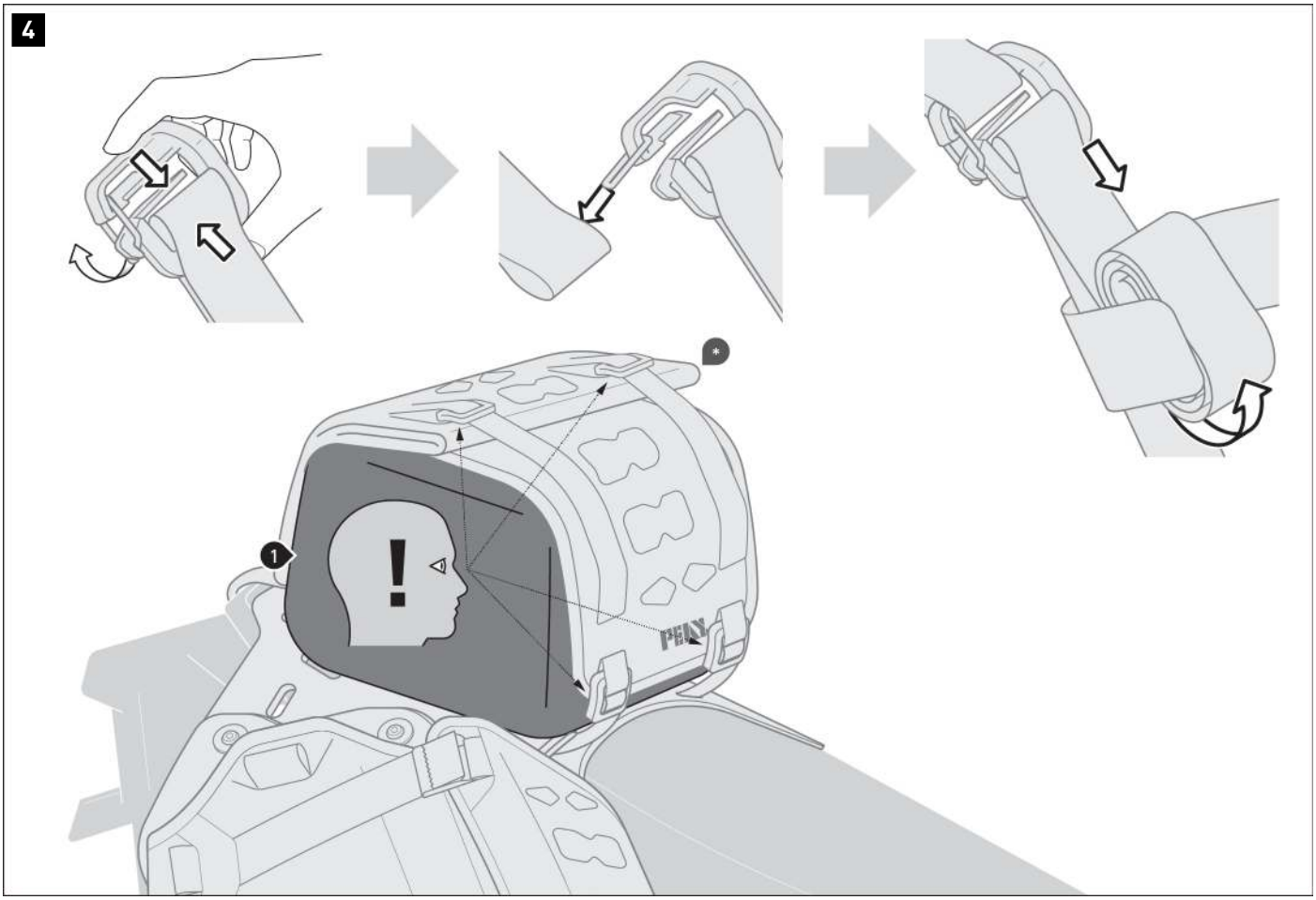

Squeeze the buckles together to open the safety catches.

Now connect all buckles to the loops.

Tighten the straps until the top bag (1) is centered and securely in place.

Carefully roll up any excess length and secure it against fluttering with the Velcro strips.

⚠ WARNING: Always close the safety catch on the buckles! Always securely tighten the straps!

⚠ WARNING: Regularly check that the product is securely in place, as described in the FUNCTIONAL CHECK section on page 1.

The content translation is automated.
© SW-MOTECH GmbH & Co. KG

Errors and omissions excepted
Subject to technical and design changes.

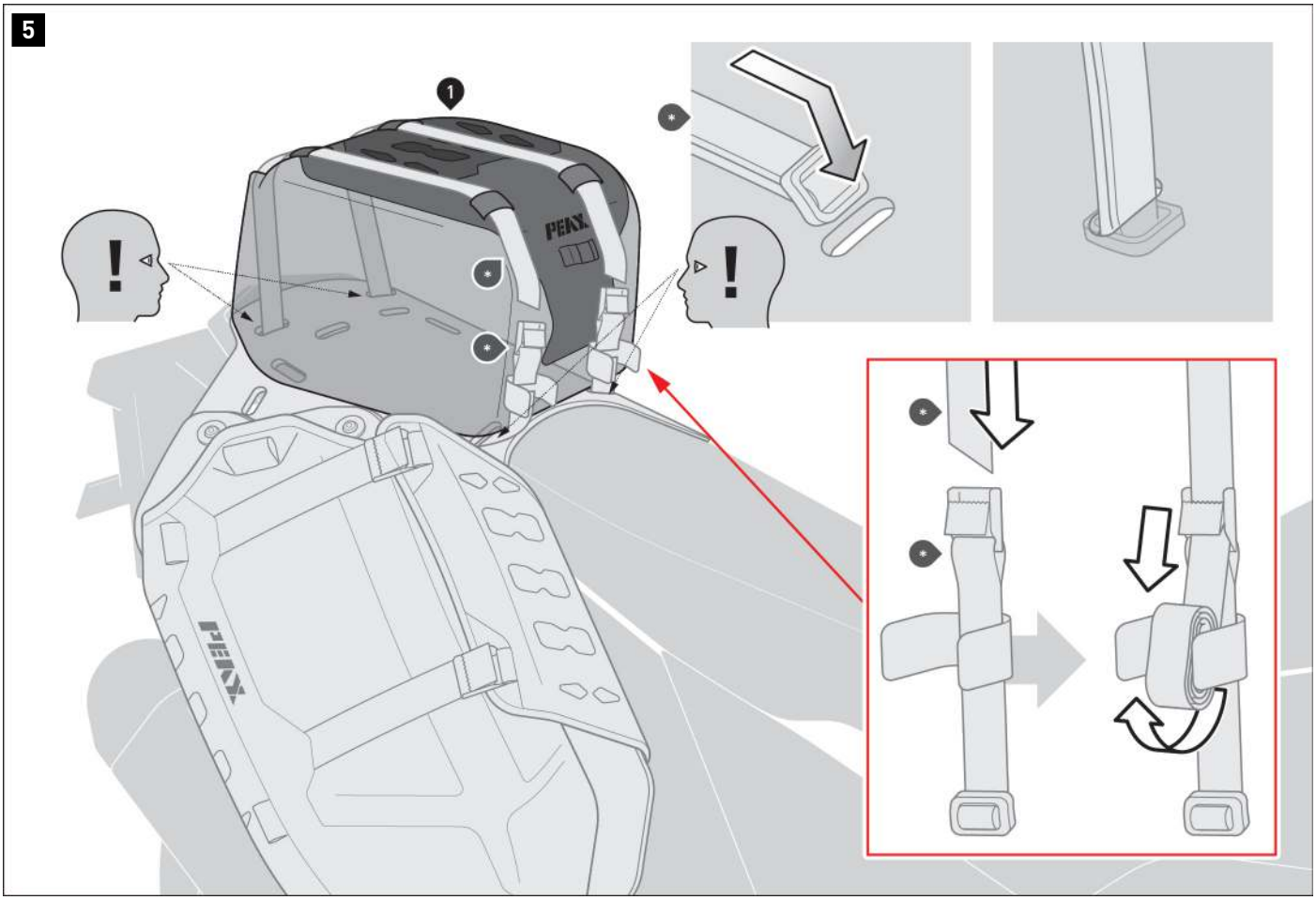

Mounting onto the Rackless system

⚠ ***NOTE:*** *Straps are not included in delivery! Please refer to the mounting instructions for the additional strap set (item no.: BC.HTA.00.508.1510·) for information regarding installation.*

The short fastening straps (·) and buckle straps (·) are attached to the plates by inserting them into the recesses, as shown in the detailed drawing above.

Feed the short fastening straps (·) through the loops on the top bag (1).
Now attach the ends of the **two** short fastening straps (·) on **both sides** to the buckle straps (·).
Tighten the fastening straps until the top bag (1) is securely attached to the vehicle.
Secure the excess length of the fastening straps (·) with the Velcro strips.

⚠ **WARNING: Regularly check that the product is securely in place, as described in the FUNCTIONAL CHECK section on page 1.**

The content translation is automated.
© SW-MOTECH GmbH & Co. KG

Errors and omissions excepted
Subject to technical and design changes.

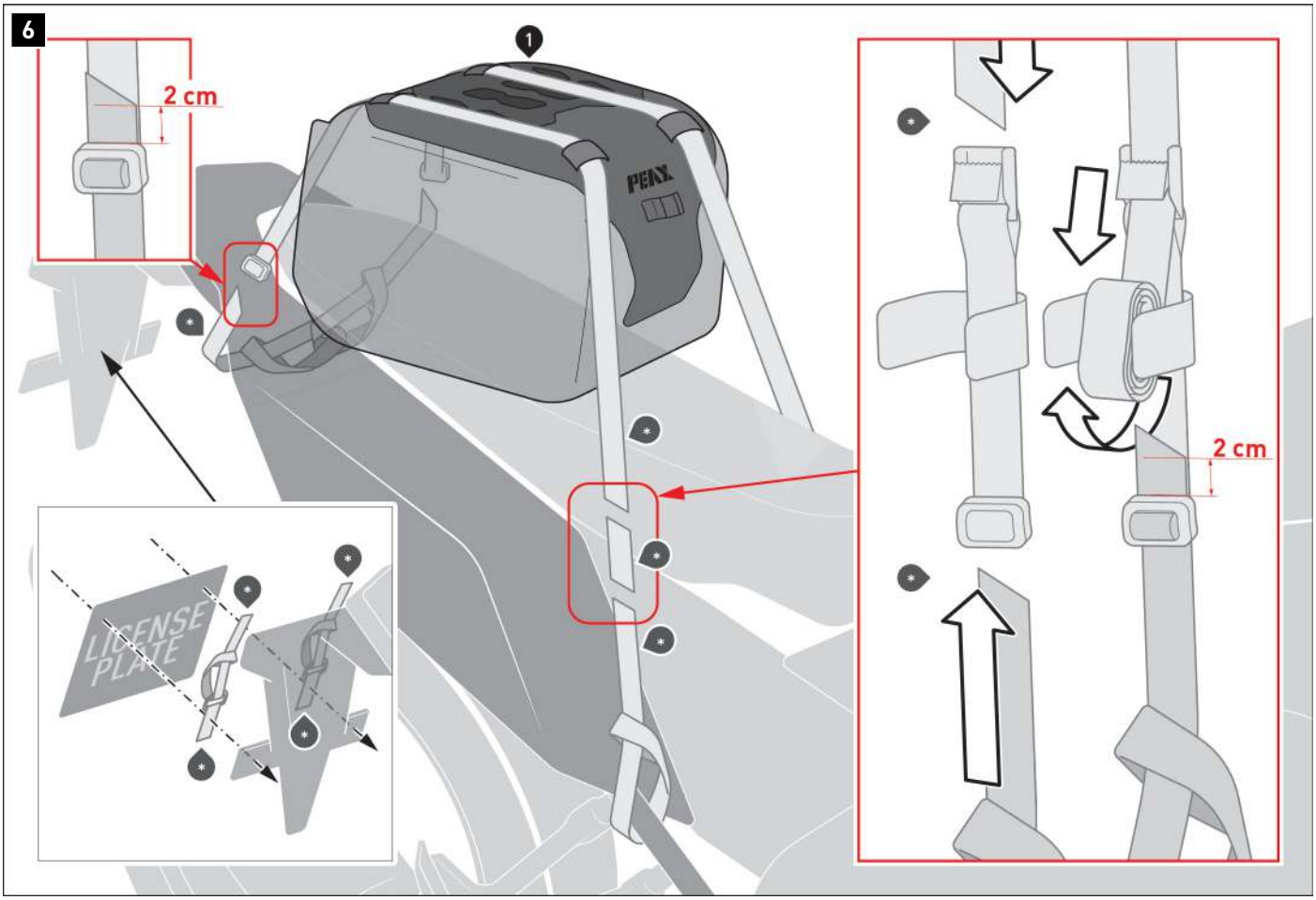

Mounting directly onto the vehicle

⚠ ***NOTE:*** *Straps are not included in delivery! Please refer to the mounting instructions for the additional strap set (item no.: BC.HTA.00.508.1510•) for information regarding installation.*

⚠ ***NOTE:*** *For heavy-duty license plate holders, SW-MOTECH recommends attachment to the lashing eyes (•). Screw the lashing eyes in place (•) using the original screws behind the license plate.*

⚠ ***NOTE:*** *Shorten any excess length of the fastening straps (•) if necessary. Ensure that the ends of the fastening straps (•) are sealed with a lighter.*

Attaching to the vehicle rear

Loop the straps (•) together or fasten to the lashing eyes (•).
Feed the long fastening straps (•) through the loops on the top bag (1).
Attach the loop straps (•) to the long fastening straps (•). The loop straps (•) must pass through the buckle by **at least 2 cm**!

Front mounting

Attach the loop straps (•) to suitable and sturdy mounting points on the vehicle (e.g. footrest mount, vehicle frame, vehicle rear, etc.).
Attach the long fastening straps (•) to the buckle straps (•). Then fasten the buckle straps (•) on the loop straps (•). The loop straps (•) must pass through the buckle by **at least 2 cm**!

Tighten the fastening straps (•) until the top bag (1) is firmly attached to the vehicle.
Secure any excess length of the fastening straps (•) with the Velcro strips and elbastic bands.

⚠ **WARNING: Regularly check that the product is securely in place, as described in the FUNCTIONAL CHECK section on page 1.**

The content translation is automated.
© SW-MOTECH GmbH & Co. KG

Errors and omissions excepted
Subject to technical and design changes.

7

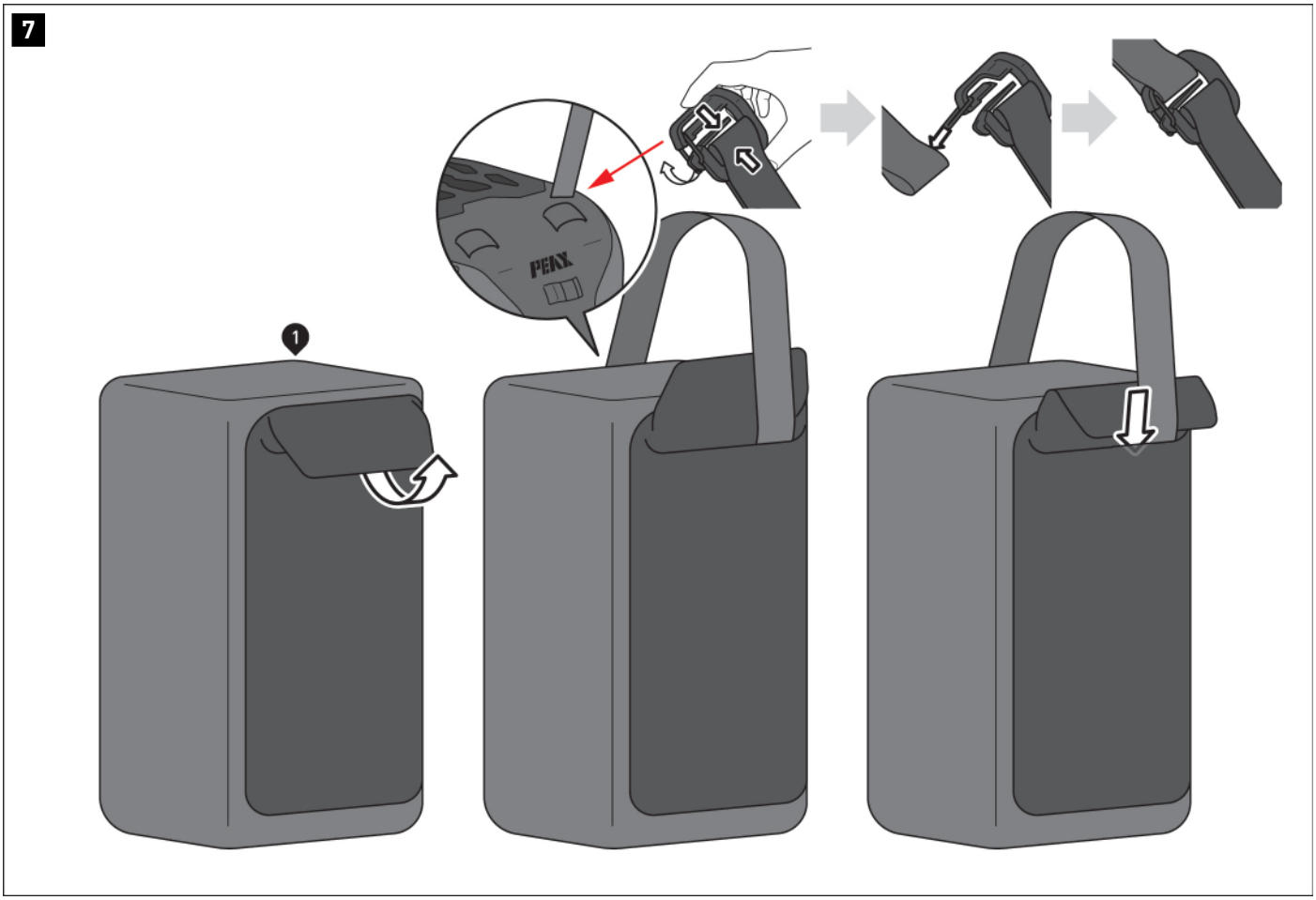

To use the top bag (1) as a shoulder bag, hook the shoulder strap into the loop on the front patch, as indicated.

The content translation is automated.
© SW-MOTECH GmbH & Co. KG

Errors and omissions excepted
Subject to technical and design changes.

8

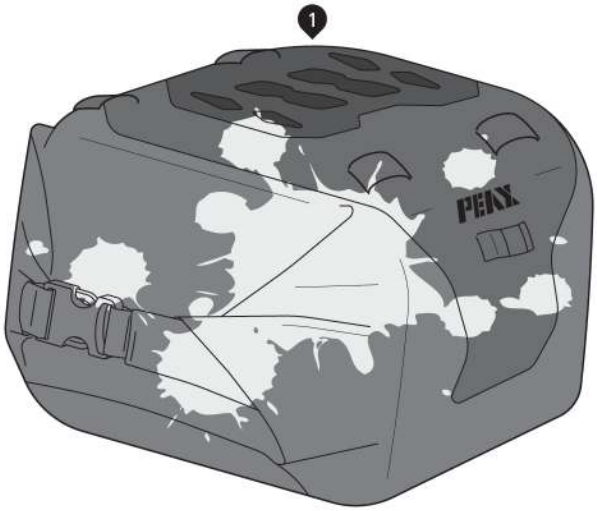





CARE

For cleaning, use **ONLY** a soft textile brush, a cloth or a sponge and warm soapy water! Then rinse with clean water.

DO NOT use harsh cleaning agents, abrasive cleaning utensils or high-pressure cleaners! Be sure to clean the tail bag after winter rides to avoid damage caused by salt.

⚠ ***NOTE:*** *Surface materials may be damaged by prolonged and intensivesolar radiation and environmental influences (e.g. smog, acid rain) Subject to colour changes (fading). SW-MOTECH assumes no liability for this.*

The content translation is automated.
© SW-MOTECH GmbH & Co. KG

Errors and omissions excepted
Subject to technical and design changes.

PRODUCT-SPECIFIC NOTES

⚠ ***NOTE:*** *Observe the country-specific regulations for the registration/operation of your vehicle and any applicable TÜV regulations. Have any parts requiring registration entered in the vehicle documents by your inspection centre after they have been installed.*

⚠ DANGER: Since this is a universal product, please be sure to check that the product can be properly and correctly attached to and used on your vehicle model before using it for the first time! After mounting, check that all vehicle components are unobstructed and can function properly! Lights such as taillights and turn light indicators must not be impeded in their function! Cables, wires, and hoses should not rub and/or squeeze against anything!

⚠ DANGER: Carry out a comprehensive check to ensure everything functions properly before departure!

⚠ DANGER: Ensure that the product is properly positioned before departure and at every rest stop (every 200 km)!

⚠ DANGER: The driving/braking behavior of the motorcycle changes noticeably after mounting this product!

⚠ DANGER: Lean angle and ground clearance may be restricted by this product!

⚠ DANGER: The maximum vehicle load specified by the vehicle manufacturer remains applicable!

see LOAD	≤ 130km/h (≤ 80mph)

The content translation is automated.
© SW-MOTECH GmbH & Co. KG

Errors and omissions excepted
Subject to technical and design changes.

Item number: **HTA.00.501.15100/B**	Revision: **00** · Date: **10 - 2026**

PEAX Rackless Mid Plate Set rear filling opening

~ 0.5 h.	EASY DIFFICULT

ENGLISH · Thank you for choosing an SW-MOTECH product. Further information (e.g., vehicle and model compatibility) can be found in our online store. Depending on the product and market, the relevant approval documents (e.g., type approval) are available for download there, if applicable. Before installation, please check whether use on public roads is permitted in your country or state and whether any permits or registrations are required. The information provided in these mounting instructions regarding the estimated installation time (h: hour) and difficulty level (1: very easy; 2: easy; 3: moderate; 4: challenging; 5: very challenging) are non-binding guidelines and depend on individual skills, prior knowledge, the tools used, and the condition of the vehicle. To avoid personal injury and property damage, read and follow all instructions and warnings in these mounting instructions before installation and use. Keep the instructions for future reference. Additional information and detailed warranty and guarantee regulations can be found in our General Terms and Conditions on our website.
This product is designed for vehicles in original condition (basic configuration). Compatibility with factory options/special upgrades, original accessories from the vehicle manufacturer and/or third-party accessories is not guaranteed; the model designations published in our online store are decisive. These mounting instructions were created to the best of our knowledge and according to the current state of knowledge at the time of publication. We reserve the right to correct any printing errors as well as content errors and make technical or design changes to the product and instructions; the most up-to-date version can be found in our online store. To the extent permitted by law, we are not liable for any damage resulting from the use of incorrect or incomplete information in these mounting instructions. The copyright for these mounting instructions belongs to SW-MOTECH.

WARNING SYMBOLS

The warning symbols used in these mounting instructions (⚠/⚠) indicate life-threatening situations, risks of injury and other hazards. Key words such as **DANGER**, **WARNING**, **CAUTION** or ***NOTE*** appear together with the aforementioned warning symbols and indicate important safety instructions for the installation and use of this product. When combined with warning symbols, these key words have the following meaning:
⚠ **DANGER:** Indicates a dangerous situation that will lead to death or serious injury if unheeded!
⚠ **WARNING:** Indicates a potentially dangerous situation that could result in death or serious injury if unheeded!
⚠ **CAUTION:** Indicates a potentially dangerous situation that could result in minor or moderate injury if unheeded!
⚠ ***NOTE:*** Indicates important information that will not lead to risk of death or injury; failure to heed it may result in property damage.

GENERAL INFORMATION

⚠ WARNING: Installation and maintenance of this product requires advanced technical knowledge, proper tools and safe handling of tools and tightening torque specifications! For safety reasons, SW-MOTECH recommends having all work carried out by a qualified professional in a workshop!
⚠ WARNING: If installing the product yourself, read and understand these mounting instructions completely before installation and use, and follow all instructions! Additionally, observe all relevant vehicle manufacturer specifications during installation and use! If any section of these mounting instructions is unclear or you require clarification, do not begin installation; discontinue any work already started and contact SW-MOTECH or a workshop with qualified professionals!

PREPARATION: Ensure a clean, level and well-lit work surface. Sort all product parts and check them against the parts list for completeness and integrity. Gather the necessary tools.
⚠ CAUTION: Ensure the vehicle is securely parked (on a level, firm surface). Switch off the engine and remove the ignition key. Allow the engine and exhaust to cool completely. When working on the electrical system, disconnect the battery (start with the negative terminal). Use appropriate tools and always wear safety glasses and gloves during installation and maintenance. Have a second person assist you with installation.

INSTALLATION: All disassembled vehicle parts and connections must be reassembled according to the vehicle manufacturer's specifications or, if specified in these mounting instructions, replaced with SW-MOTECH parts.
⚠ WARNING: Only use liquid thread locker if explicitly instructed in these mounting instructions or in the vehicle manufacturer's specifications to prevent threaded connections from loosening on their own! Do not apply liquid thread locker to plastic parts or use it in areas where the vehicle manufacturer prohibits it!
⚠ DANGER: Tightening torques not specified in these mounting instructions must be taken from the vehicle manufacturer's specifications or determined by qualified workshop professionals! Tightening torques incorrectly may lead to broken components and serious injury!

FUNCTIONAL CHECK: After mounting, ensure that no moving parts are blocked and that vehicle functionality is not impaired. Cables, lines, and hoses must never rub against each other, be squeezed or excessively taut. Check this while the steering wheel is at full lock and throughout the entire suspension travel.
⚠ WARNING: Perform a complete functional check before starting your journey. After the first 50 km, and then at regular intervals, check all fasteners for a secure fit and correct torque and retighten if necessary. Mounted accessories may affect handling and stability; conduct a careful test drive first and adjust your driving style accordingly!

STORAGE: When not in use, store the product in a dry, clean and weatherproof location.

DISPOSAL: Dispose of the product and packaging in an environmentally responsible manner in accordance with any applicable regulations at a suitable recycling or collection point. In particular, separate any electrical/electronic components and taken them to a specialized collection point. Be aware of local disposal regulations and follow them. To avoid waste, prioritize repair or reuse and properly separate materials by type.

SW-MOTECH GmbH & Co. KG
Ernteweg 7-10
35282 Rauschenberg
Germany

info@sw-motech.com
www.sw-motech.com

The content translation is automated.
© SW-MOTECH GmbH & Co. KG

Errors and omissions excepted
Subject to technical and design changes.



Take note of the symbols and what they mean in the ASSEMBLY section. If the term OEM appears in the ASSEMBLY section, the vehicle manufacturer's specifications must be observed and applied.



If you have any questions, please don't hesitate to contact our Customer Service team or our distributors. You can find our telephone number and a list of our distributors in our online shop:
www.sw-motech.com

The content translation is automated.
© SW-MOTECH GmbH & Co. KG

Errors and omissions excepted
Subject to technical and design changes.

1

1	2
	
HTA.00.501.003.00	HTA.00.501.500.01
1/1	**2**/2

The content translation is automated.
© SW-MOTECH GmbH & Co. KG

Errors and omissions excepted
Subject to technical and design changes.

1

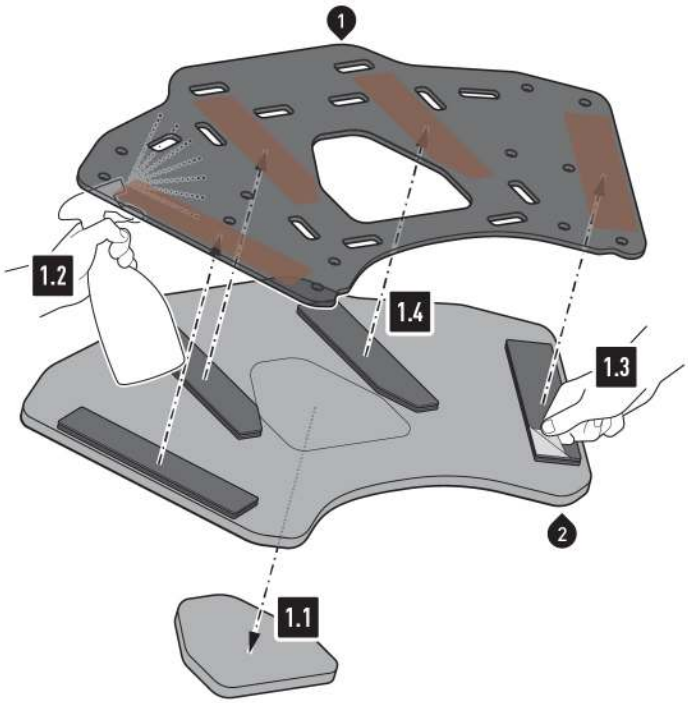

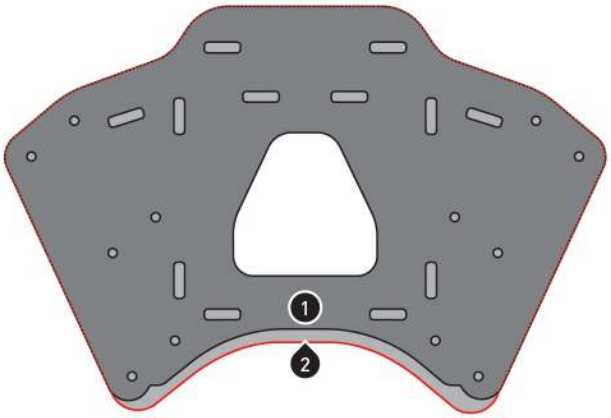

1.1 - Punch out the perforated cutout for the tank.

1.2 - Thoroughly clean the underside of the center plate (1) to remove any grease and dirt residue.

1.3 - The Velcro strips for the center plate (1) are attached to those on the foam plate (2); remove the film from these Velcro strips.

1.4 - Now press the center plate (1) flush with the top part and side contours onto the foam plate (2) as well as the adhesive surface of the Velcro strips, as shown in the illustration on the right.
Allow components to rest so that the adhesive surfaces can bond.





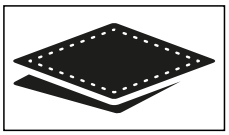



The content translation is automated.
© SW-MOTECH GmbH & Co. KG

Errors and omissions excepted
Subject to technical and design changes.

PRODUCT-SPECIFIC NOTES

⚠ ***NOTE*** :*Observe the country-specific regulations for the registration/operation of your vehicle and any applicable TÜV regulations. Have any parts requiring registration entered into your vehicle documents by your inspection centre after they have been installed.*

The content translation is automated.
© SW-MOTECH GmbH & Co. KG

Errors and omissions excepted
Subject to technical and design changes.

Item number: **HTA.00.509.15000**	Revision: **00** · Date: **10 - 2026**

PEAX Rackless Connector Kit

~ 0.25 h.	**EASY** **DIFFICULT**

ENGLISH · Thank you for choosing an SW-MOTECH product. Further information (e.g., vehicle and model compatibility) can be found in our online store. Depending on the product and market, the relevant approval documents (e.g., type approval) are available for download there, if applicable. Before installation, please check whether use on public roads is permitted in your country or state and whether any permits or registrations are required. The information provided in these mounting instructions regarding the estimated installation time (h: hour) and difficulty level (1: very easy; 2: easy; 3: moderate; 4: challenging; 5: very challenging) are non-binding guidelines and depend on individual skills, prior knowledge, the tools used, and the condition of the vehicle. To avoid personal injury and property damage, read and follow all instructions and warnings in these mounting instructions before installation and use. Keep the instructions for future reference. Additional information and detailed warranty and guarantee regulations can be found in our General Terms and Conditions on our website.
This product is designed for vehicles in original condition (basic configuration). Compatibility with factory options/special upgrades, original accessories from the vehicle manufacturer and/or third-party accessories is not guaranteed; the model designations published in our online store are decisive. These mounting instructions were created to the best of our knowledge and according to the current state of knowledge at the time of publication. We reserve the right to correct any printing errors as well as content errors and make technical or design changes to the product and instructions; the most up-to-date version can be found in our online store. To the extent permitted by law, we are not liable for any damage resulting from the use of incorrect or incomplete information in these mounting instructions. The copyright for these mounting instructions belongs to SW-MOTECH.

WARNING SYMBOLS

The warning symbols used in these mounting instructions (⚠/⚠) indicate life-threatening situations, risks of injury and other hazards. Key words such as **DANGER**, **WARNING**, **CAUTION** or ***NOTE*** appear together with the aforementioned warning symbols and indicate important safety instructions for the installation and use of this product. When combined with warning symbols, these key words have the following meaning:
⚠ **DANGER:** Indicates a dangerous situation that will lead to death or serious injury if unheeded!
⚠ **WARNING:** Indicates a potentially dangerous situation that could result in death or serious injury if unheeded!
⚠ **CAUTION:** Indicates a potentially dangerous situation that could result in minor or moderate injury if unheeded!
⚠ ***NOTE:*** Indicates important information that will not lead to risk of death or injury; failure to heed it may result in property damage.

GENERAL INFORMATION

⚠ WARNING: Installation and maintenance of this product requires advanced technical knowledge, proper tools and safe handling of tools and tightening torque specifications! For safety reasons, SW-MOTECH recommends having all work carried out by a qualified professional in a workshop!
⚠ WARNING: If installing the product yourself, read and understand these mounting instructions completely before installation and use, and follow all instructions! Additionally, observe all relevant vehicle manufacturer specifications during installation and use! If any section of these mounting instructions is unclear or you require clarification, do not begin installation; discontinue any work already started and contact SW-MOTECH or a workshop with qualified professionals!

PREPARATION: Ensure a clean, level and well-lit work surface. Sort all product parts and check them against the parts list for completeness and integrity. Gather the necessary tools.
⚠ CAUTION: Ensure the vehicle is securely parked (on a level, firm surface). Switch off the engine and remove the ignition key. Allow the engine and exhaust to cool completely. When working on the electrical system, disconnect the battery (start with the negative terminal). Use appropriate tools and always wear safety glasses and gloves during installation and maintenance. Have a second person assist you with installation.

INSTALLATION: All disassembled vehicle parts and connections must be reassembled according to the vehicle manufacturer's specifications or, if specified in these mounting instructions, replaced with SW-MOTECH parts.
⚠ WARNING: Only use liquid thread locker if explicitly instructed in these mounting instructions or in the vehicle manufacturer's specifications to prevent threaded connections from loosening on their own! Do not apply liquid thread locker to plastic parts or use it in areas where the vehicle manufacturer prohibits it!
⚠ DANGER: Tightening torques not specified in these mounting instructions must be taken from the vehicle manufacturer's specifications or determined by qualified workshop professionals! Tightening torques incorrectly may lead to broken components and serious injury!

FUNCTIONAL CHECK: After mounting, ensure that no moving parts are blocked and that vehicle functionality is not impaired. Cables, lines, and hoses must never rub against each other, be squeezed or excessively taut. Check this while the steering wheel is at full lock and throughout the entire suspension travel.
⚠ WARNING: Perform a complete functional check before starting your journey. After the first 50 km, and then at regular intervals, check all fasteners for a secure fit and correct torque and retighten if necessary. Mounted accessories may affect handling and stability; conduct a careful test drive first and adjust your driving style accordingly!

STORAGE: When not in use, store the product in a dry, clean and weatherproof location.

DISPOSAL: Dispose of the product and packaging in an environmentally responsible manner in accordance with any applicable regulations at a suitable recycling or collection point. In particular, separate any electrical/electronic components and taken them to a specialized collection point. Be aware of local disposal regulations and follow them. To avoid waste, prioritize repair or reuse and properly separate materials by type.

SW-MOTECH GmbH & Co. KG
Ernteweg 7-10
35282 Rauschenberg
Germany

info@sw-motech.com
www.sw-motech.com

The content translation is automated.
© SW-MOTECH GmbH & Co. KG

Errors and omissions excepted
Subject to technical and design changes.



Take note of the symbols and what they mean in the ASSEMBLY section. If the term OEM appears in the ASSEMBLY section, the vehicle manufacturer's specifications must be observed and applied.



If you have any questions, please don't hesitate to contact our Customer Service team or our distributors. You can find our telephone number and a list of our distributors in our online shop:
www.sw-motech.com



Use thread locker: Indicates that a thread must be coated with liquid thread locker. H (HIGH): high strength; M (MEDIUM): medium strength; L (LOW): low strength.



Tighten/note the tightening torque information: Indicates the tightening torque of a part specified by SW-MOTECH or the vehicle manufacturer (OEM).

The content translation is automated.
© SW-MOTECH GmbH & Co. KG

Errors and omissions excepted
Subject to technical and design changes.

1

1	2	3
		
M6 x 10; PEAX HTA.00.509.002.48	HTA.00.509.001.48	BC.HTA.00.501.030.35
6/6	**6**/6	**6**/6

The content translation is automated.
© SW-MOTECH GmbH & Co. KG

Errors and omissions excepted
Subject to technical and design changes.

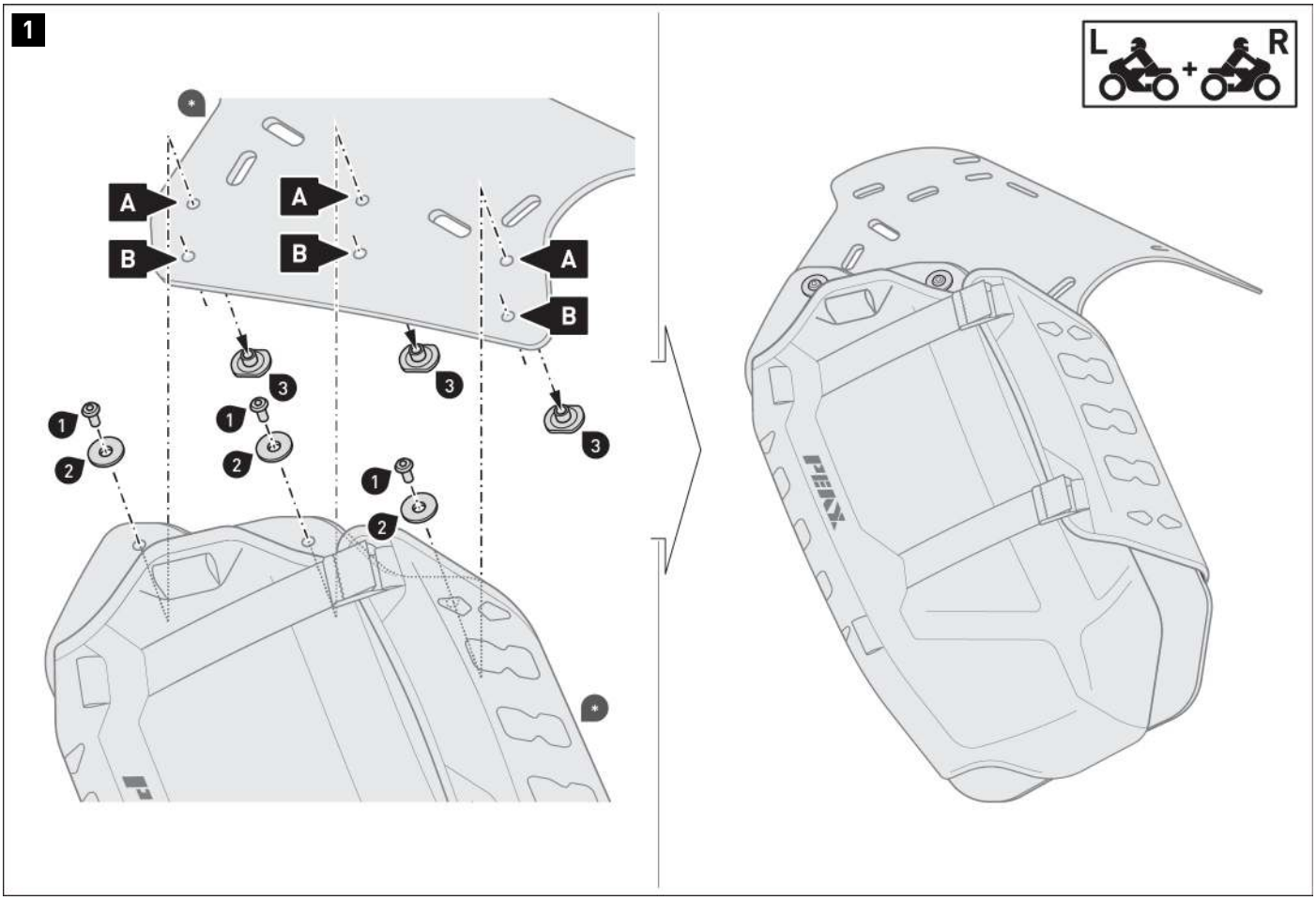

⚠ WARNING: Always wear eye and hand protection!
⚠ WARNING: Always use suitable tools!

⚠ ***NOTE:*** *Screw the holsters (·) adapted to the dimensions of your vehicle's rear to the marked mounting positions (A) or (B).*

Screw the holsters (·) to the center plate **on both sides** (·) (see also mounting instructions for Item No.: HTA.00.501.15·0·).
⚠ WARNING: Use liquid threadlocker!
Tighten the screws (1) as specified in the mounting instructions.









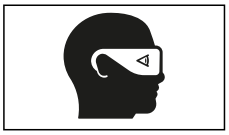

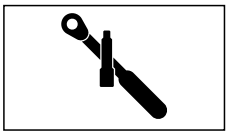

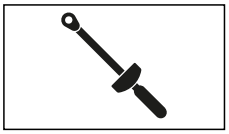

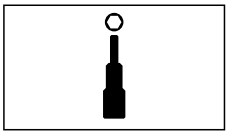

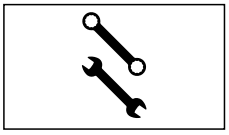



The content translation is automated.
© SW-MOTECH GmbH & Co. KG

Errors and omissions excepted
Subject to technical and design changes.

PRODUCT-SPECIFIC NOTES

⚠ ***NOTE*** :*Observe the country-specific regulations for the registration/operation of your vehicle and any applicable TÜV regulations. Have any parts requiring registration entered into your vehicle documents by your inspection centre after they have been installed.*

The content translation is automated.
© SW-MOTECH GmbH & Co. KG

Errors and omissions excepted
Subject to technical and design changes.