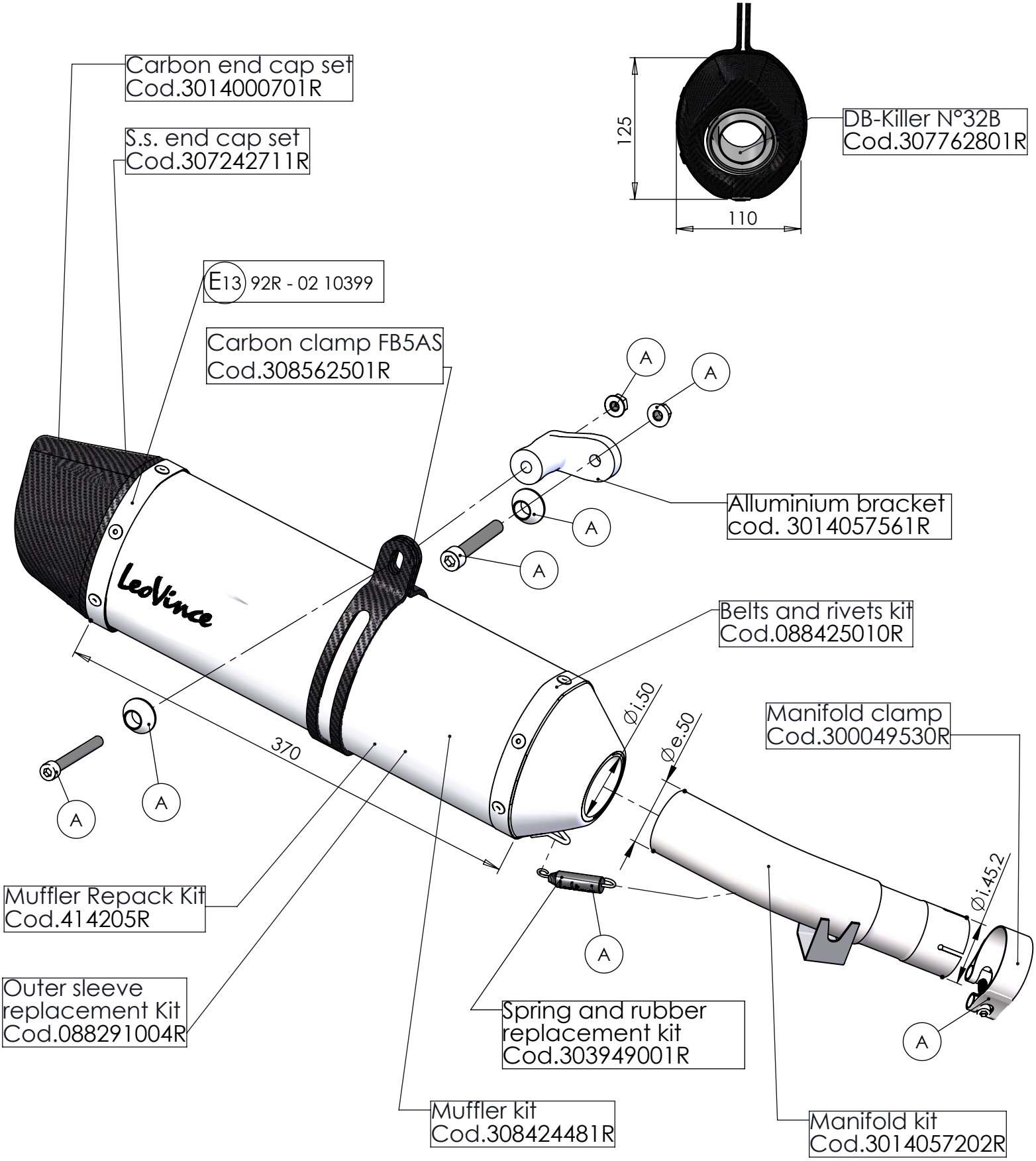

ART. 14304E SPARE PARTS

KAWASAKI VERSYS 1000
(fit with original panniers) (fit with original centre stand)

(A) FITTING KIT cod.3014057601R