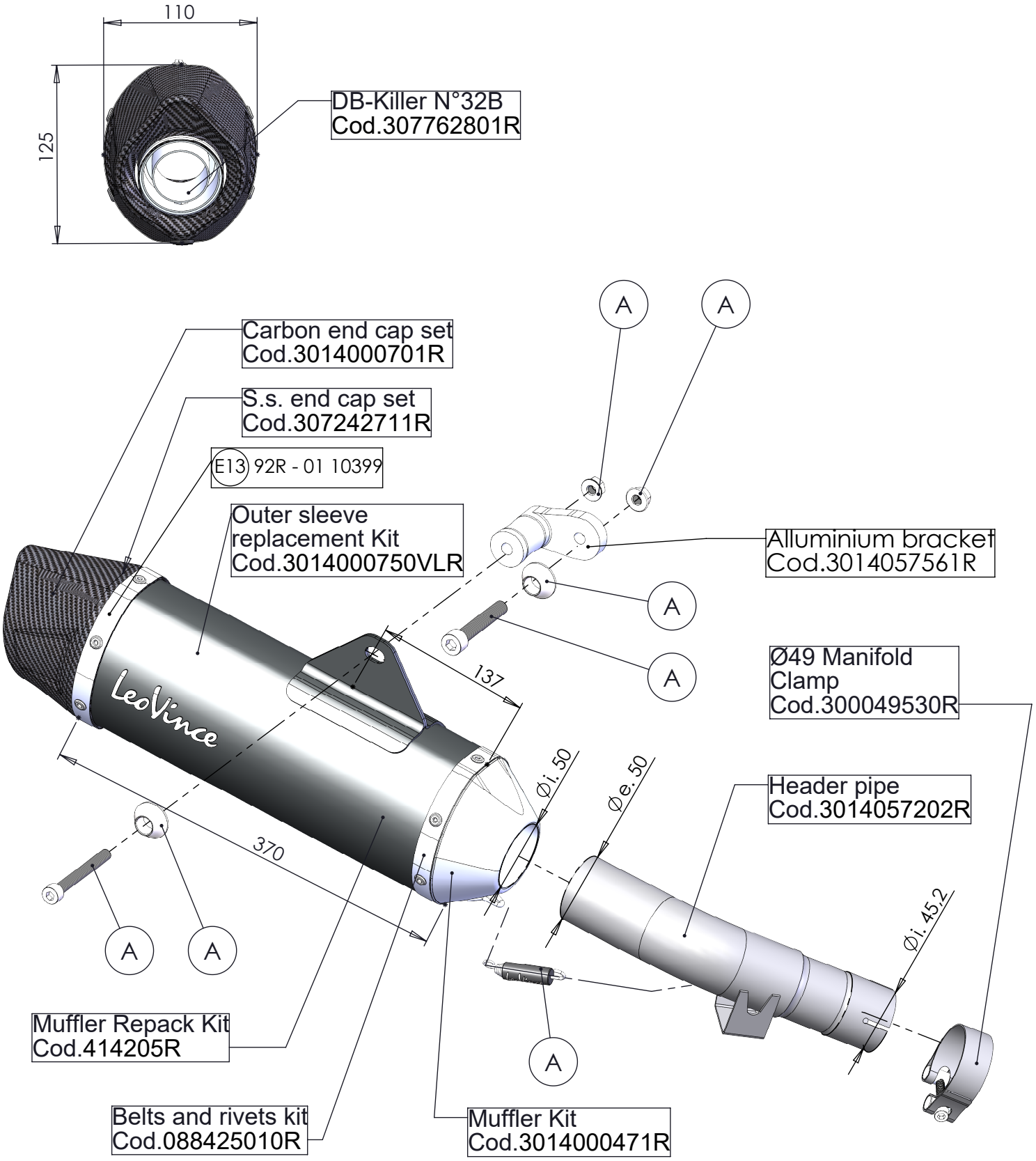

ART. 14057 SPARE PARTS

KAWASAKI VERSYS 1000

(A) FITTING KIT COD. 3014057601R