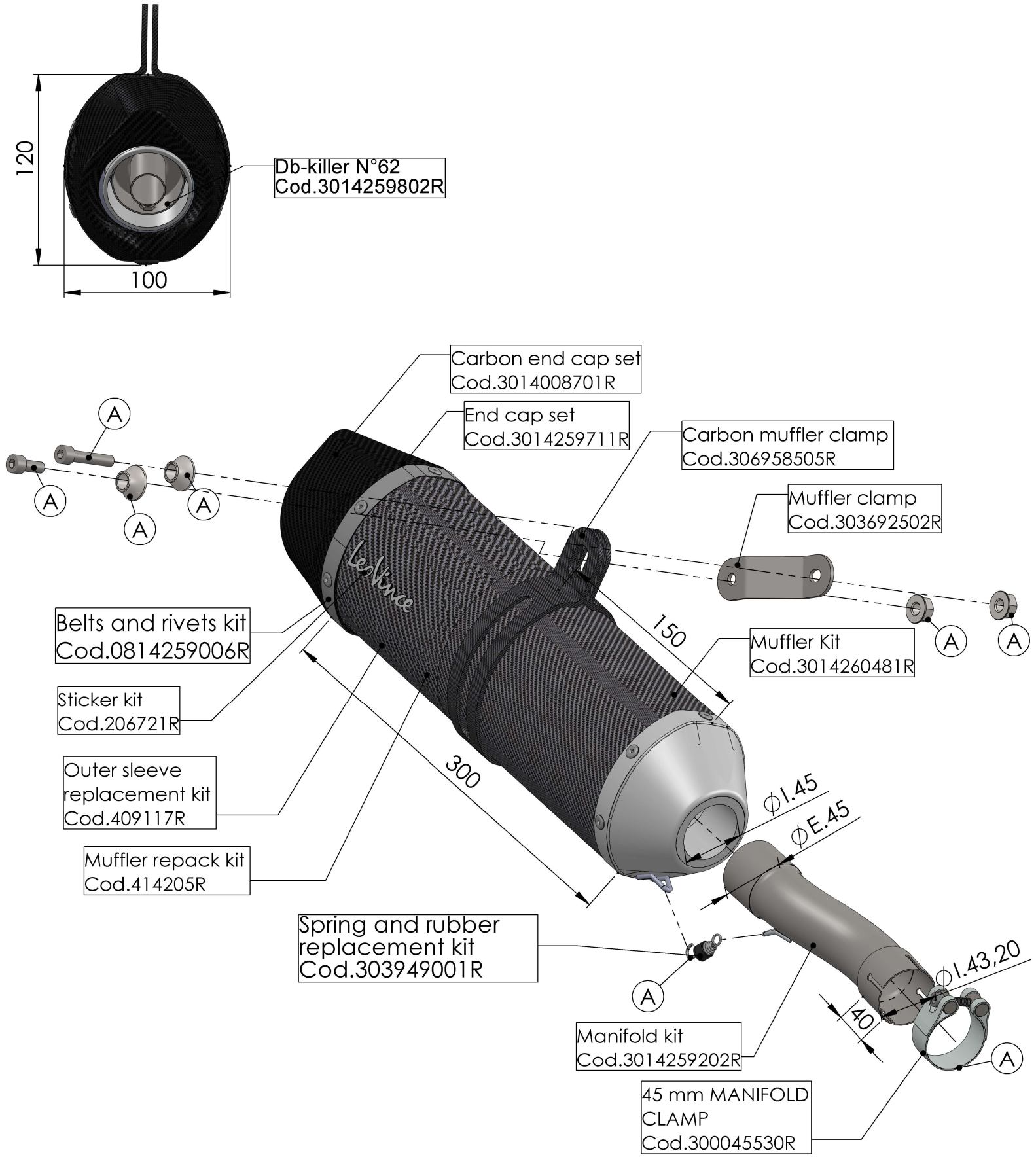

ART. 14260E SPARE PARTS

KAWASAKI NINJA 400

Ⓐ FITTING KIT Cod. 3014259601R