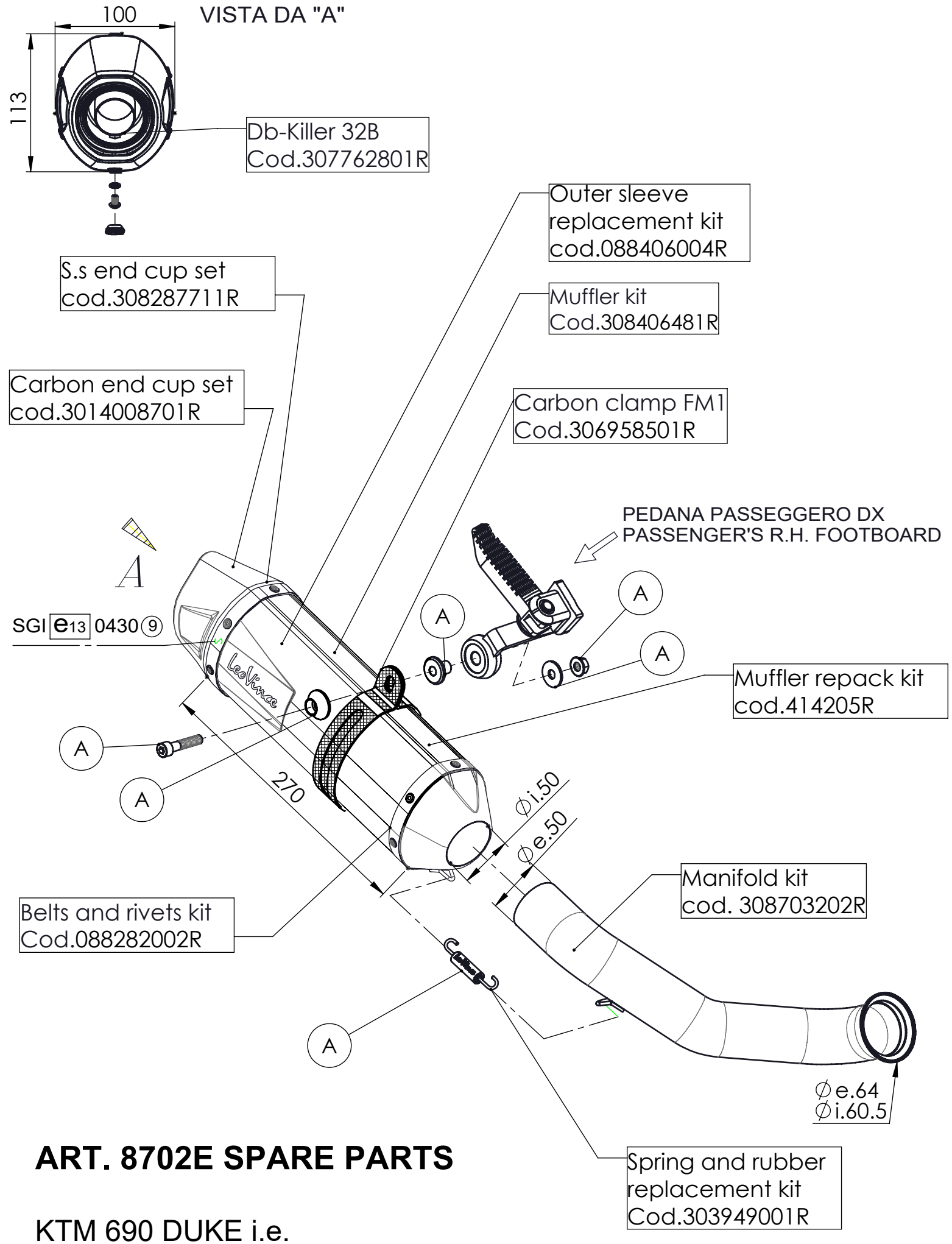

ART. 8702E SPARE PARTS

KTM 690 DUKE i.e.

Ⓐ FITTING KIT. cod.308703601R