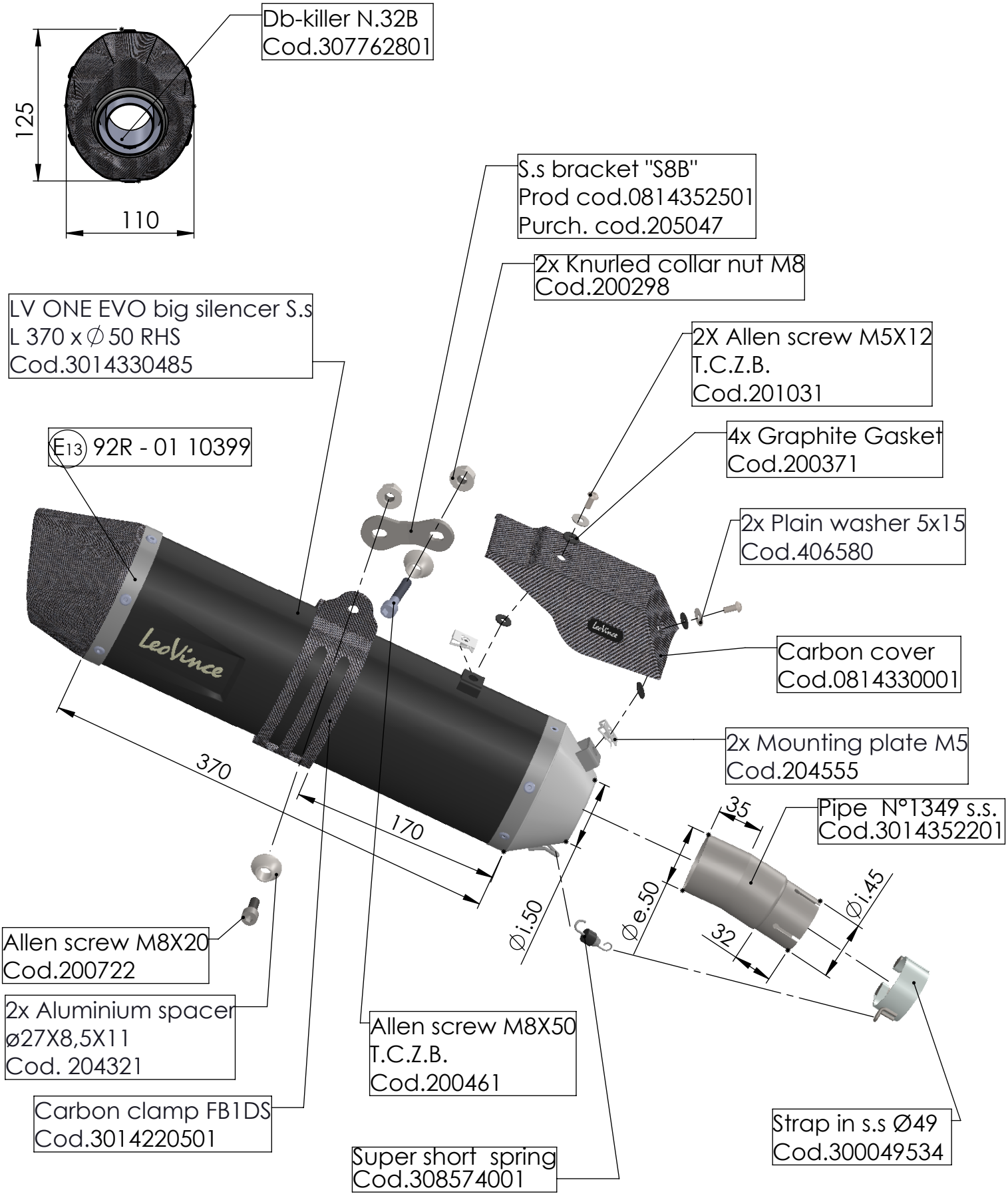

ART. 14352EB

TRIUMPH TIGER 900 GT / RALLY / PRO
(fits with original panniers) (also fits 35kW version)

SLIP-ON - LV ONE EVO - BLACK - APPROVED